MOHAWK

MADE IN THE U.S.A.

MODEL TR-33 & TR-33WT RATED 33,000 LB CAP.
MODEL TR-35 & TR-35WT RATED 35,000 LB CAP.
MODEL TR-50 & TR-50WT RATED 50,000 LB CAP.
MODEL TR-75 & TR-75WT RATED 75,000 LB CAP.

FOUR POST VEHICLE LIFT MANUAL

WARRANTY CARD

THANK YOU
FOR SENDING IN
YOUR
REGISTRATION
CARD.
MOHAWK SERVICE
DEPARTMENT

- ☑ INSTALLATION
- ☑ OPERATION
- ☑ MAINTENANCE
- ☑ PARTS MANUAL

MOHAWK LIFTS, LLC.
65 VROOMAN AVE.
P.O. BOX 110
AMSTERDAM, NY 12010
TOLL FREE : 1-800-833-2006
FAX : 1-518-842-1289
LOCAL : 1-518-842-1431

Rev: 12-1-2015
File: TR-33-35-50-75-33WT-35WT-50WT-70WT 12-1-2015.doc
Part No. 601-800-311

READ MANUAL THOROUGHLY BEFORE INSTALLING, OPERATING OR SERVICING THIS LIFT !!
Deliver these instructions to lift owner/user/employer along with other instructional materials furnished with this lift.

IMPORTANT SAFETY INSTRUCTIONS

When using your garage equipment, basic safety precautions should always be followed, including the following:

1. Read this manual and review all illustrations of this manual thoroughly before attempting to install, operate or maintain this lift.

2. Deliver these operation, inspection, and maintenance instructions to the lift owner/user/employer along with the other instructional materials furnished with this lift.

3. Maintenance on this equipment is to be performed only by trained lift service personnel, and and worn or broken parts are to be replaced only with genuine Mohawk brand supplied parts.

4. Care must be taken as burns can occur from touching hot parts.

5. Do not operate equipment with a damaged cord or if the equipment has been dropped or damaged - until it has been examined by a qualified serviceman.

6. Do not let cord or hoses hang over edge of table, bench or counter or come in contact with hot manifolds or moving fan blades.

7. If an extension cord is necessary, a cord with a current rating equal to or more than that of the equipment should be used. Cords rated for less current than the equipment may overheat. Care should be taken to arrange the cord so that it will not be tripped over or pulled.

8. Always unplug equipment from electrical outlet when not in use. Never use the cord to pull the plug from the outlet. Grasp plug and pull to disconnect

9. To reduce the risk of fire, do not operate equipment in the vicinity of open containers of flammable liquids (gasoline). WARNING: Risk of Explosion: This equipment has internal arcing and sparking parts which should not be exposed to flammable vapors. This equipment is only suitable for installation in a garage having sufficient air circulation to be considered a non-hazardous location.

10. Adequate ventilation should be provided when working on operating internal combustion engines.

11. Keep hair, loose clothing, fingers, and all parts of body away from moving parts.

12. To reduce the risk of electric shock, do not use on wet surfaces or expose to rain.

13. Use only as described in this manual. Use only manufacturer's (Mohawk) recommended attachments.

14. ALWAYS WEAR SAFETY GLASSES. Everyday eyeglasses only have impact resistant lenses, they are NOT safety glasses.

SAVE THESE INSTRUCTIONS **Rev (10/22/99)**

APPENDAGE:

(7/10/2012)

LIFT ENVIRONMENT:

Mohawk prohibits the outdoor installation of this standard lift, which is APPROVED FOR INDOOR USAGE ONLY, in a normal garage type environment. Any concerns in applications that expose the lift to additional environmental effects, such as paint booths, wash bays, outdoors, high or low temperatures, etc. must be addressed to our engineering department, where provisions could/may be made to the lift to accommodate the area of use. Our engineering department must be made aware in advance of these conditions and any additional code requirements that must be met.

Also, the foundation for which this lift must be installed on must comply to the minimum specifications as set forth in this manual. Any drainage slopes in the bay where the lift is to be installed must be directed away from the posts to prevent water accumulation at the post bases.

Standard foundation flooring and anchorage specifications are contained within this manual. For installation within a seismic area, a qualified person must be consulted to address seismic loads and other local or state requirements.

ACCESSORIES:

All accessories (i.e. jacking beams, etc.) supplied with this lift are to be used on this lift only. Accessories from other lifts are not acceptable and could result in injury to the user.

If attachments, accessories or configuration modifying components are used on this lift and, if they are not certified for use on this lift, then the certification of this lift shall become null and void. Contact the participant (MOHAWK LIFTS, LLC.) for information pertaining to certified attachments, accessories or configuration modifying components.

LOCKOUT/TAGOUT REQUIREMENTS:

The start switch provided with this unit must not be used as a primary disconnecting means. A separate disconnecting means must be provided in accordance with all applicable codes. It is the responsibility of the owner/user of this unit to provide a proper lockout/tagout device for this unit before or during installation in conformance to ANSI Z244.1 and any local/state/national electrical codes and any OSHA regulations.

JACKING BEAMS:

Loading of the jacking beams or combinations of jacking beams above the rated capacity of the lift itself could result in personal injury to the operator and/or damage to the lift and/or vehicle. The load rating of any jacking beam or combination of jacking beams on this unit must not exceed the rated capacity of the lift.

HAVE A QUESTION?

Call your local
Mohawk distributor
For parts, service and technical support.

Distributor Place Card Here

Please have this unit's model and serial number when calling for service.

Model Number _____

Serial Number _____

OR CONTACT:

MOHAWK LIFTS, LLC.
65 Vrooman Ave.
P.O. Box 110
Amsterdam, NY 12010
Toll Free: 1-800-833-2006
Local: 1-518-842-1431
Fax: 1-518-842-1289
Internet: www.MOHAWKLIFTS.com
E-Mail: Service@MOHAWKLIFTS.com

MOHAWK WARRANTIES

EFFECTIVE DATE: 12/1/2015*

READ THIS WARRANTY IN ITS ENTIRETY

GENERAL WARRANTY INFORMATION:

MOHAWK'S OBLIGATION UNDER THIS WARRANTY IS LIMITED TO REPAIRING OR REPLACING ANY PART OR PARTS RETURNED TO THIS FACTORY, TRANSPORTATION CHARGES PREPAID BY CUSTOMER WITH AUTHORIZED RETURN (RGA), WHICH PROVE UPON INSPECTION TO BE DEFECTIVE AND WHICH HAVE NOT BEEN MISUSED. DAMAGE OR FAILURE TO ANY PART DUE TO FREIGHT DAMAGE OR LACK OF REQUIRED REGULAR DOCUMENTED MAINTENANCE IS NOT COVERED UNDER THIS WARRANTY. ALL WARRANTY CLAIMS MUST BE PERFORMED IN ACCORDANCE TO MOHAWK'S WARRANTY PARTS RETURN POLICY (CONTACT MOHAWK'S SERVICE DEPARTMENT FOR MORE INFORMATION).

THIS WARRANTY DOES NOT COVER MIS-DIAGNOSING OF UNIT OR PARTS RETURNED THAT ARE NON-DEFECTIVE. THIS WARRANTY DOES NOT COVER ANY CONSEQUENTIAL OR INCIDENTAL DAMAGES INCLUDING, BUT NOT LIMITED TO, LOST REVENUES OR BUSINESS HARM. THIS EQUIPMENT HAS BEEN DESIGNED FOR USE IN NORMAL VEHICLE MAINTENANCE APPLICATIONS. A SPECIFIC INDIVIDUAL WARRANTY MUST BE ISSUED FOR UNITS THAT DEVIATE FROM INTENDED USAGE, SUCH AS HIGH CYCLE USAGE IN INDUSTRIAL APPLICATIONS, OR USAGE IN EXTREMELY ABUSIVE ENVIRONMENTS. MOHAWK RESERVES THE RIGHT TO DECLINE RESPONSIBILITY WHEN REPAIRS OR MODIFICATIONS HAVE BEEN MADE OR ATTEMPTED BY OTHERS WITHOUT WRITTEN AUTHORIZATION FROM MOHAWK LIFTS, LLC.. THIS WARRANTY DOES NOT COVER LABOR OR TRANSPORTATION. THIS WARRANTY DOES NOT COVER DOWNTIME EXPENSES INCURRED WHEN UNIT IS IN REPAIR. **THE LIFT MUST BE REGISTERED WITHIN 30 DAYS OF INSTALLATION BY MAILING SUPPLIED WARRANTY REGISTRATION CARD TO MOHAWK AND MUST BE SIGNED BY A LICENSED ELECTRICIAN**. THE MODEL NUMBER AND SERIAL NUMBER OF THE EQUIPMENT MUST BE FURNISHED WITH ALL WARRANTY CLAIMS. THIS WARRANTY STATEMENT CONTAINS THE ENTIRE AGREEMENT BETWEEN MOHAWK LIFTS, LLC. AND THE PURCHASER UNLESS OTHERWISE SPECIFICALLY EXPRESSED IN WRITING. THIS NON-TRANSFERABLE WARRANTY APPLIES TO THE ORIGINAL PURCHASER ONLY.

THIS WARRANTY DOES NOT COVER NORMAL SURFACE WEAR ITEMS, ITEMS SUBJECT TO ABRASION, OR ITEMS USED IN A CORROSIVE ENVIRONMENT. SOME ITEMS ON LIFT ARE SUBJECT TO NORMAL "WEAR AND TEAR" AND ARE NOT COVERED UNDER THIS WARRANTY.

STRUCTURAL AND MECHANICAL COMPONENTS (ALL LIFTS):

STRUCTURAL AND MECHANICAL COMPONENTS OF THIS UNIT ARE GUARANTEED FOR THE BELOW STATED TIME FRAME, SPECIFIC TO MODEL LISTED, FROM THE DATE OF SHIPMENT FROM FACTORY, AGAINST DEFECTS IN WORKMANSHIP AND/OR MATERIALS WHEN LIFT IS INSTALLED AND USED ACCORDING TO SPECIFICATIONS.

25-YEARS STRUCTURAL / 10 YEARS MECHANICAL: TWO-POST MODELS A-7, SYSTEM IA-10, LC-12, LMF-12, TP-16, TP-18, TP-20, TP-26, TP-30. STRUCTURAL ITEMS COVERED INCLUDE LEG, CARRIAGE, SWING ARM AND SLIDER WELDMENTS (EXCLUDING NORMAL WEAR AREAS AS STATED ABOVE). MECHANICAL ITEMS COVERED INCLUDE ROLLER BEARINGS AND LIFTING CHAIN.

5-YEAR: MODELS TL-7.

3-YEAR: MODELS TR-19, TR-25, FL-25, TR-30, TR-33, TR-35, TR-50, TR-75, TR-110, TR-120, MP-SERIES LIFTS.

2-YEAR: MODELS PARALLELOGRAM SERIES LIFTS.

1-YEAR: MODELS TD-1000, TD-2000, CT-1000, USL-6000.

POWER UNIT (ALL LIFTS):

ALL POWER UNIT COMPONENTS (MOTOR, PUMP AND RESERVOIR) ARE GUARANTEED FOR TWO YEARS FOR PARTS, FROM THE DATE OF SHIPMENT FROM FACTORY, AGAINST DEFECTS IN WORKMANSHIP AND/OR MATERIALS WHEN THE LIFT IS INSTALLED, WIRED BY A LICENSED ELECTRICIAN AND USED ACCORDING TO SPECIFICATIONS.

ELECTRICAL COMPONENTS (ALL LIFTS):

ALL ELECTRICAL COMPONENTS (EXCLUDING MOTOR) ARE GUARANTEED FOR ONE YEAR FOR PARTS, FROM THE DATE OF SHIPMENT FROM FACTORY, AGAINST DEFECTS IN WORKMANSHIP AND/OR MATERIALS WHEN THE LIFT IS INSTALLED AND USED ACCORDING TO SPECIFICATIONS. SEE WARRANTY EXCEPTIONS SECTION FOR BATTERIES.

PNEUMATIC-AIR COMPONENTS (ALL LIFTS):

ALL PNEUMATIC (AIR) COMPONENTS (I.E. AIR CYLINDERS AND POPPET AIR VALVES) ARE GUARANTEED FOR ONE YEAR FOR PARTS, FROM THE DATE OF SHIPMENT FROM FACTORY, AGAINST DEFECTS IN WORKMANSHIP AND/OR MATERIALS WHEN THE LIFT IS INSTALLED AND USED ACCORDING TO SPECIFICATIONS. COMPONENTS IN A PNEUMATIC SYSTEM THAT ARE NOT PROPERLY REGULATED, LUBRICATED AND CONDITIONED WITH AN AIR DRYING SYSTEM ARE NOT COVERED UNDER WARRANTY.

HYDRAULIC COMPONENTS (ALL LIFTS):

EXCLUDING CYLINDERS AND PUMPS (COVERED IN OTHER SECTIONS), ALL HYDRAULIC COMPONENTS (I.E. VALVES AND FITTINGS) ARE GUARANTEED FOR ONE YEAR FOR PARTS, FROM THE DATE OF SHIPMENT FROM FACTORY, AGAINST DEFECTS IN WORKMANSHIP AND/OR MATERIALS WHEN THE LIFT IS INSTALLED AND USED ACCORDING TO SPECIFICATIONS.

HYDRAULIC CYLINDERS (MODEL SPECIFIC LIFTS):
THE FOLLOWING MODELS ARE GUARANTEED FOR 5 YEARS (PARTS ONLY), FROM DATE OF SHIPMENT FROM FACTORY, FOR HYDRAULIC CYLINDERS, AGAINST DEFECTS IN WORKMANSHIP AND/OR MATERIALS WHEN THE LIFT IS INSTALLED AND USED ACCORDING TO SPECIFICATIONS: TWO-POST MODELS A-7, SYSTEM IA-10, LC-12, LMF-12, TP-16, TP-18, TP-20, TP-26, TP-30.

ALL OTHER MODELS ARE GUARANTEED FOR TWO YEARS (PARTS ONLY), FROM THE DATE OF SHIPMENT FROM FACTORY, FOR HYDRAULIC CYLINDERS, AGAINST DEFECTS IN WORKMANSHIP AND/OR MATERIALS WHEN THE LIFT IS INSTALLED AND USED ACCORDING TO SPECIFICATIONS (EXCLUDING USL-6000, WHICH IS ONE YEAR).

THE "*EXTENDED LIFETIME CYLINDER SEAL WARRANTY*" (BELOW) IS APPLICABLE TO THE FOLLOWING MOHAWK LIFTS ONLY: TWO-POST MODELS A-7, SYSTEM IA-10, LC-12, LMF-12, TP-16, TP-18, TP-20, TP-26, TP-30. SEE MOHAWK'S "*EXTENDED LIFETIME CYLINDER SEAL WARRANTY*" FOR SPECIFIC WARRANTY PROVISIONS FOR HYDRAULIC CYLINDERS.

THE "***EXTENDED LIFETIME CYLINDER SEAL WARRANTY***" IS AS FOLLOWS:

AS THE ORIGINAL PURCHASER OF A MOHAWK LIFT MANUFACTURED BY MOHAWK LIFTS, LLC. YOU ARE ENTITLED TO AN EXTENDED CYLINDER SEAL WARRANTY.

MOHAWK'S OBLIGATION UNDER THIS WARRANTY IS LIMITED TO SUPPLYING MODEL SPECIFIC CYLINDER SEALS. THE CUSTOMER IS RESPONSIBLE FOR SHIPPING AND HANDLING OF THE SEALS. MOHAWK IS NOT RESPONSIBLE/LIABLE FOR THE REBUILD OF CYLINDERS BY OTHERS. THIS WARRANTY IS NON-TRANSFERABLE AND RUNS TO THE ORIGINAL PURCHASER ONLY.

STANDARD OPTIONS (ALL LIFTS):
ALL STANDARD OPTIONS OF THIS UNIT ARE GUARANTEED FOR ONE YEAR FOR PARTS, FROM THE DATE OF SHIPMENT FROM FACTORY, AGAINST DEFECTS IN WORKMANSHIP AND/OR MATERIALS WHEN LIFT IS INSTALLED AND USED ACCORDING TO SPECIFICATIONS.

CUSTOM LIFTS AND CUSTOM OPTIONS:
ALL "CUSTOM" LIFTS AND/OR "CUSTOM" OPTIONS ARE GUARANTEED FOR ONE YEAR FOR PARTS, FROM THE DATE OF SHIPMENT FROM FACTORY, AGAINST DEFECTS IN WORKMANSHIP AND/OR MATERIALS WHEN LIFT IS INSTALLED AND USED ACCORDING TO SPECIFICATIONS.

WARRANTY EXCEPTIONS (ALL LIFTS):
ADJUSTMENTS: THIS WARRANTY DOES NOT COVER CASUAL AND ROUTINE ADJUSTMENTS SUCH AS, BUT NOT LIMITED TO: FITTINGS, SENSORS AND SWITCHES, ANCHOR BOLT RE-TIGHTENING, OR ANY SHIMMING OR ADJUSTMENTS REQUIRED DURING A PROPER AND PROFESSIONAL INSTALLATION BY A QUALIFIED INSTALLER.
MAINTENANCE AND INSPECTIONS: IF THIS UNIT IS NOT MAINTAINED AND INSPECTED IN ACCORDANCE TO THE RELEVANT SECTIONS IN THE USERS MANUAL FOR THIS SPECIFIC MODEL, WARRANTY IS VOID. OSHA, ANSI AND MOHAWK REQUIRE THAT RECORDS MUST BE MAINTAINED TO PROVE THAT INSPECTIONS AND MAINTENANCE OF THIS UNIT HAVE BEEN ROUTINELY PERFORMED BY QUALIFIED INDIVIDUALS.
ABUSE: IF THIS UNIT IS FOUND TO BE OVERLOADED (PURPOSELY OR UNKNOWINGLY), USED IN A SITUATION BEYOND ITS INTENDED FUNCTION, NOT MAINTAINED & INSPECTED REGULARLY, USED IN AN ABUSIVE ENVIRONMENT OR BEYOND NORMAL SHOP USAGE, THIS WARRANTY IS VOID IN ITS ENTIRETY.
NON-EXISTENT PROBLEMS: FOR SERVICE VISITS, PART REPLACEMENTS, LABOR, ETC. FOR PARTS FOUND TO BE NON-DEFECTIVE, OR FOR A UNIT DIS-FUNCTION THAT DOES NOT EXIST, IT IS THE LIFT OWNER THAT REQUESTED THE SERVICE VISIT WHO BEARS THE RESPONSIBILITY OF ALL RELATED EXPENSES.
BATTERIES: ALL BATTERIES CARRY THE BATTERY MANUFACTURER'S WARRANTY. MAINTENANCE REQUIREMENTS AND ABUSE PROVISIONS ARE AS STATED BY THE BATTERY MANUFACTURER. REFER TO BATTERY MANUFACTURER'S WARRANTY.
SPECIAL/MODIFIED INSTALLATIONS: THIS WARRANTY DOES NOT COVER "NON-TRADITIONAL" INSTALLATIONS. INSTALLATIONS ARE TO BE DONE ACCORDING TO SPECIFICATIONS, OR THE WARRANTY IS VOID.
WEARABLE COMPONENTS: SOME ITEMS ON LIFTS ARE SUBJECT TO NORMAL "WEAR AND TEAR" AND ARE NOT COVERED UNDER THIS WARRANTY.
NON-VEHICLE / RE-PURPOSED LIFTS: THIS WARRANTY DOES NOT COVER LIFTS THAT ARE "RE-PURPOSED" TO RAISE AND LOWER EQUIPMENT THAT ARE NOT CONSIDERED VEHICLES.

*** THIS WARRANTY SUPERSEDES ALL OTHER WARRANTY POLICIES PREVIOUSLY STATED AND IN ALL OTHER MOHAWK PRODUCT SPECIFIC LITERATURE (MANUALS, BROCHURES, ETC.).**

Rev 12/1/2015

The Automotive Lift Institute (ALI) is a trade association comprised of US and Canadian manufacturers and certain national distributors of automotive lifts. For almost 50 years, the ALI in cooperation with the American National Standards Institute (ANSI) has continued to sponsor the national standard ANSI/ALI ALCTV:2011 "Safety Requirements for Construction, Testing, and Validation for Automotive Lifts."

The new "ALI/ETL Automotive Lift Certification Program" is based on ALI developed methods and criteria for third party testing of automotive lifts to validate conformance with ANSI/ALI ALCTV:2011.

For automotive lifts to be certified, manufacturers must execute an agreement with the ALI and ETL / Intertek Testing Services and must meet certain requirements:

- Must be structurally tested in accordance with the test requirements as outlined in ANSI/ALI ALCTV:2011.
- All motor operated units must be listed by a nationally recognized testing laboratory (NRTL) in accordance with ANSI/UL-201.
- The manufacturer's production facility must meet quality control requirements as set forth in the ANSI Z34.1-1987 and the ALI/ETL Automotive Lift Certification Program Procedural Guide.
- All manufacturer-provided instructions, manuals, and operator safety documents, must meet the requirements of the ANSI/ALI ALCTV:2011 and ANSI/UL-201.

Lifts meeting these rigid requirements may be listed in the directory of certified lifts and be labeled with the "ALI/ETL certification mark" (Above on right), and, if applicable, the ETL listing mark to ANSI/UL-201.

Mohawk has been a long-standing member of ALI and most of Mohawk's popular models are currently listed and certified. Other Mohawk models are in various stages of testing. To obtain a complete and current certification listing, contact MOHAWK LIFTS, LLC. or visit www.mohawklifts.com or www.ali-directory.org To obtain a copy of the current automotive lift standard, contact ALI or ANSI or visit www.autolift.org

Some people purchase quality products and others do not. You are assured of quality when you purchase a Mohawk product in compliance with the certification program.

CONTENTS

TOPIC	PAGE
• **INSTALLATION TEXT**	
GENERAL INFORMATION	9-12
APPENDAGES	13-14
PACKING LIST	15
INSTALLATION INSTRUCTIONS	16-18
FINAL CHECKOUT	19
LIFT LIMITATIONS	20
SAFETY TIPS	21
CONTROL PANEL FUNCTION DEFINITIONS	22-23
PRE OPERATION CHECK LIST	24
LIFTING PROCEDURES	24
MAINTENANCE PROCEDURES	25-26
TROUBLE SHOOTING CHART	27
ELECTRICAL INFORMATION	28
SERVICE CHART	29
MAINTENANCE CHART	29
• **FIGURES & DIAGRAMS**	
LIFT SETUP DIMENSIONS	
DIAGONAL MEASUREMENT LAYOUT	
WEJ-IT ANCHORS / NYLON LOCK NUT ASSEMBLY	
CONTROL PANEL FUNCTIONS	
POST SHIMS	
FLOOR SLOPE & SHIMMING GUIDELINES	
TRACK AUTO LEVEL SYSTEM	
WHEEL CHOCK PLACEMENT	
• **ELECTRICAL / HYDRAULIC SCHEMATICS**	
HYDRAULIC SCHEMATIC	075-050-080
ELECTRICAL SCHEMATIC	075-050-093
BOX WIRING DIAGRAM	075-050-094
PANEL WIRING DIAGRAM	075-050-091
• **PARTS (& ASSEMBLY) DRAWINGS**	
• **NEW SLAB RECOMMENDATIONS**	
• **SAFETY, CAUTION & WARNING DIAGRAMS**	

ALSO INCLUDED WITH MANUAL: **SAFETY TIPS CARD**
ALI LIFTING IT RIGHT MANUAL

GENERAL INFORMATION

BEFORE INSTALLING A LIFT

- BEFORE INSTALLING A MOHAWK LIFT REVIEW THE FOLLOWING ITEMS . EACH REPAIR SHOP BAY IS DIFFERENT. IN AN ATTEMPT TO PREVENT OVERSIGHTS, ALL OF THE FOLLOWING INFORMATION MUST BE VERIFIED.

WHAT ARE THE LIFT SPECIFICATIONS ?

THE SPECIFICATIONS IN THIS MANUAL ARE FOR A STANDARD LIFT. ANY SPECIAL FEATURES WILL BE INDICATED ON THE LIFT VERIFICATION SHEET. USE THE LIFT VERIFICATION SHEET AND THE TR 33/35/50/75 DIMENSIONAL CHART TO VERIFY THE UNITS SPECIFICATIONS AND SET-UP DIMENSIONS.

OVERHEAD OBSTRUCTIONS:

THE AREA IN WHICH THE LIFT WILL BE LOCATED SHALL BE FREE OF OBSTRUCTIONS. HEATERS, BUILDING SUPPORTS, ELECTRICAL CONDUIT. ALL OF THESE ITEMS ARE TO BE (20 FT) TWENTY FEET ABOVE THE BAY FLOOR

CONCRETE FLOOR:

VISUALLY LOOK OVER THE BAY FLOOR. THE LIFT CAN NOT BE INSTALLED ON EXPANSION SEAMS, OR CONCRETE THAT IS CRACKED. THE LIFT CANNOT BE EXPECTED TO BE STRUCTURALLY SOUND ON DEFECTIVE CONCRETE.

TEST DRILL THE FLOOR:

TEST DRILL THE FLOOR TO VERIFY CONCRETE THICKNESS. TEST DRILL EACH BAY WHEN MORE THAN ONE LIFT IS BEING INSTALLED.

FLOOR REQUIREMENTS:

THIS INFORMATION IS IN THE GENERAL FLOOR REQUIREMENTS.

POWER SUPPLY:

REFER TO THE LIFT VERIFICATION SHEET FOR THE POWER SUPPLY SPECIFICATIONS.

BAY SIZE:

REFER TO THE LIFT VERIFICATION SHEET AND THE DIMENSIONAL CHART.

SPECIFICATIONS:

REFERENCE ALL SPECIFICATIONS PRIOR TO INSTALLING THE LIFT.

IMPORTANT

- ALL INFORMATION, ILLUSTRATIONS, AND SPECIFICATIONS IN THIS MANUAL ARE SPECIFIC TO MOHAWK MODELS TR-33, TR-35, TR-50, TR-75. WE RESERVE THE RIGHT TO MAKE CHANGES AT ANY TIME WITHOUT NOTICES.
- ALWAYS REFER TO THE LIFT VERIFICATION SHEET AND THE TR 33/35/50/75 DIMENSIONAL CHART. SPECIFIC INFORMATION PERTAINING TO THIS LIFT IS FOUND ON THESE PAGES.

GENERAL INFORMATION CONTINUED

RECOMMENDED TOOL LIST

SIZE / QTY	TOOL	USED FOR
3/4 IN	WRENCH / SOCKET	HYDRAULIC HOSES
11 / 16 IN	WRENCH / SOCKET	HYDRAULIC FITTINGS
5 / 8 IN	WRENCH / SOCKET	HYDRAULIC FITTINGS
1-1/16 IN	WRENCH / SOCKET	RAMP / CROSSRAIL
1-1/8 IN	WRENCH / SOCKET	RAMP / CROSSRAIL / WEJ-IT ANCHORS
1-1/4 IN	WRENCH / SOCKET	CHAIN CONNECTORS
1 SET	ALLEN WRENCHES	AS REQUIRED
1	PLIERS / NEEDLE NOSE	CHAIN MASTER LINKS
1	RATCHET	AS REQUIRED
50 FT	MEASURING TAPE	SITE LAYOUT
1	CHALK LINE	SITE LAYOUT (BLUE / YELLOW CHALK)
4 FT	BUBBLE LEVEL	VERIFY LEVEL ASSEMBLY
25 FT	FISH TAPE	PULLING CHAINS
1	HAMMER	AS REQUIRED
8 FT	STEP LADDER	ASSEMBLE ELEVATED ITEMS
4	4 X 4 X 24 IN DUNNAGE	SUPPORT TRACKS OFF FLOOR
1	PRY BAR	ADJUST HEAVY ITEMS
50 / 100 FT	LEAD CORD	OPERATE ELECTRICAL TOOLS
3/4 IN	MASONRY DRILL BIT	DRILL ANCHOR HOLES
1	IMPACT DRILL	DRILL ANCHOR HOLES
1	FORK TRUCK (6000 LBS. MIN CAP.)	ERECT / MOVE HEAVY COMPONENTS

WARNING

BEFORE DRILLING THE MOUNTING HOLES

- REFERENCE ANCHOR INSTALLATION INFO IN FIGURE SECTION FOR DRILLING AND WEJ-IT WARNINGS AND INSTALLATION INSTRUCTIONS.
- CHECK THE DIMENSIONS OF THE POST AT THE BOTTOM FROM THE FACE OF POST ONE TO THE FACE OF POST NUMBER TWO.
- CHECK THE DIMENSIONS OF THE POST AT THE BOTTOM FROM THE FACE OF POST THREE TO THE FACE OF POST NUMBER FOUR
- USE A SHARP DRILL BIT AS NOT TO DRILL AN UNDERSIZED HOLE. DRILL THE HOLE EQUAL TO THE LENGTH OF THE WEJ-IT ANCHOR.. BLOW OUT THE HOLE WITH SHOP AIR, OR VACUUM. INSERT THE ANCHOR SO THAT THE WASHER RESTS AGAINST THE POST FOOTING. WHEN THE LEVEL HAS BEEN VERIFIED, TIGHTEN THE NUT AS STATED FOR ANCHOR SPECIFICATIONS.
- MAKE SURE THE CONCRETE IS SOLID WHEN DRILLING. CRACKS AND EXPANSION SEAMS REDUCE THE EFFECTIVENESS OF THE WEJ-IT ANCHOR. NEVER INSTALL THE ANCHOR UNDER THESE CONDITIONS.
- NEVER USE AN IMPACT TOOL TO TIGHTEN THE WEJ-IT ANCHORS. USE A TORQUE WRENCH ONLY.
- AFTER DRILLING EACH HOLE, VACUUM CLEAN AND INSERT THE WEJ-IT ANCHOR.
- ONLY AFTER VERIFYING A SQUARE LEVEL UNIT, CAN THE UNIT BE SECURELY MOUNTED TO THE SHOP FLOOR.
- USING THE HOLES AT THE BASE OF EACH POST AS A GUIDE, DRILL THE FOUR MOUNTING HOLES FOR THE ANCHORS.

GENERAL INFORMATION CONTINUED

FLOOR REQUIREMENTS

MODEL	MINIMUM THICKNESS	MINIMUM COMPRESSIVE STRENGTH	MINIMUM AGING
TR-33 / 35 / 50 / 75	6 INCHES	4000 P.S.I.	28 DAYS

NOTE

CONSULT WITH A BUILDING ARCHITECT FOR SPECIFIC INFORMATION ON THE INSTALLATION SIGHT

DO NOT INSTALL ANY MOHAWK LIFT ON ANY OTHER SURFACE OTHER THAN CONCRETE CONFORMING TO THE MINIMUM TENSILE STRENGTH, MINIMUM AGING, AND THE MINIMUM THICKNESS STATED ABOVE.

DO NOT INSTALL ANY MOHAWK LIFT ON EXPANSION SEAMS OR ON CRACKED, OR DEFECTIVE CONCRETE.

DO NOT INSTALL ANY MOHAWK LIFT ON SECONDARY FLOOR LEVELS OR ON ANY GROUND WITH A BASEMENT BENEATH WITHOUT WRITTEN AUTHORIZATION FROM THE BUILDING ARCHITECT.

NEVER, NEVER HAND MIX YOUR OWN CONCRETE.

IF FOR ANY REASON A NEW CONCRETE SLAB SECTION IS REQUIRED, FOLLOW THE INSTRUCTIONS FOR THE FLOOR MODIFICATION DATA.

FLOOR MODIFICATION DATA

MODEL	FOOTING THICKNESS	FOUR PADS WIDTH X LENGTH	VOLUME
TR-33 / 35 / 50 / 75	12 INCHES	6 FT X 6 FT	5.4 CUBIC YARDS

NOTE

FOUR FOOTINGS 6 FT X 6 FT X 12 IN DEEP MAY BE USED. FIGURE 1

IF, FOR ANY REASON, A NEW CONCRETE SLAB SECTION IS REQUIRED, MINIMUM THICKNESS, COMPRESSIVE STRENGTH, AND PROPER AGING IS MANDATORY.

CERTIFIED STRENGTH DOCUMENTATION SHOULD BE OBTAINED FROM THE FIRM WHO SUPPLIES THE CONCRETE MIXTURE AT THE TIME OF THE POUR.

NEVER, NEVER HAND MIX YOUR OWN CONCRETE.

FOR TYPICAL SLAB DRAWING AND DETAILED REQUIREMENTS CONTACT:
MOHAWK LIFTS, LLC.

GENERAL INFORMATION CONTINUED

TR-SERIES STANDARD LIFT SPECIFICATIONS

LIFT MODEL	MAX CAPACITY	WORKING PRESSURE	RELIEF PRESSURE
TR-33 & 33WT	33,000 LB	2,000 PSI	2,300 PSI
TR-35 & 35WT	35,000 LB	2,000 PSI	2,300 PSI
TR-50 & 50WT	50,000 LB	2,400 PSI	2,650 PSI
TR-70WT	70,000 LB	3,000 PSI	3,200 PSI
TR-75	75,000 LB	3,000 PSI	3,200 PSI

LIFTING SPEED (UP CYCLE) APPROX.	1 MINUTES - 40 SECONDS (100 SECONDS)	
LIFTING HEIGHT (STROKE)	5 FEET	60 INCHES
OVERALL WIDTH (W/O CONSOLE)	14 FT. 5 IN.	173 IN.
OVERALL LENGTH (FOR 25' STD TRACKS)	41 FT. 4 - 1/8 IN.	495 - 1/8 IN.
TRACK WIDTH	2 FT.	24 IN.
CLEARANCE BETWEEN POST (WIDTH)	11 FT. 10 IN	142 IN.
MAXIMUM WHEEL BASE (FOR 25' TRKS)	27 FT.	324 IN.
SHIPPING WEIGHT	17,000 LBS.	

POWER UNIT SPECIFICATIONS

MONARCH MODEL	T-12-30-0-20-01-1-070000-00-0-0	
MOTOR VOLTAGE	208-230 VAC	460 VAC
MOTOR HORSE POWER	10 HP	10 HP
MOTOR FULL LOAD AMPS	40 AMP	20 AMP
MOTOR PHASE	THREE PHASE	
MOTOR CYCLE / HERTZ	60 HZ	
MOTOR SPEED (RPM)	1800 RPM	
PUMP FLOW (GPM)	8.8 GPM	
RESERVOIR CAPACITY (GALLONS)	30 U.S. GALLON	
POWER UNIT	HORIZONTAL	
HYDRAULIC FLUID MEDIUM	DEXRON III ATF	
FILTER	10 MICRON – SPIN ON	
CIRCUIT BREAKER	PER N.E.C. / LOCAL CODE	

SUGGESTED MINIMUM BAY SIZE

WIDTH	DEPTH	HEIGHT
18 FEET	45 FEET	20 FEET

NOTE

THE PLACEMENT OF THE UNIT IS DETERMINED BY THE TYPE / LENGTH, WIDTH, HEIGHT OF VEHICLE BEING SERVICED. ALLOW AMPLE ROOM (THREE TO FOUR FEET) FOR WALKWAYS ETC.

ANCHOR / WEJ-IT

LENGTH	DIAMETER	DRILL SIZE MINIMUM	DRILL SIZE MAXIMUM	TORQUE FOOT POUNDS
5 INCHES	3/4 INCH	0.775	0.787	See Diagram

WARNING

NEVER USE AN IMPACT TOOL TO TIGHTEN THE WEJ-IT ANCHOR.

APPENDAGES

RECOMMENDATIONS BY THE INDIVIDUAL USER OR USING ORIGINATION FOR IMPROVING THIS PUBLICATION OR ANY ASPECT OF THE PRODUCT ARE ENCOURAGED AND SHOULD BE FORWARDED IN WRITING TO :

MOHAWK LIFTS, LLC.
PRODUCT IMPROVEMENTS
P. O.. BOX 110 AMSTERDAM, NY, 12010

THIS IS NOT A VEHICLE LIFTING PROCEDURE MANUAL AND NO ATTEMPT IS MADE OR IMPLIED HEREIN TO INSTRUCT THE USER IN LIFTING METHODS PARTICULARLY TO THE INDIVIDUAL APPLICATION OF THE EQUIPMENT DESCRIBED IN THIS MANUAL. RATHER, THE CONTENTS OF THIS MANUAL ARE INTENDED AS A BASE LINE FOR OPERATION, MAINTENANCE, TROUBLE SHOOTING, AND PARTS LISTING OF THE UNIT AS IT STANDS ALONE AND AS IT IS INTENDED AND ANTICIPATED TO BE USED IN CONJUNCTION WITH OTHER EQUIPMENT.

PROPER APPLICATION OF THE EQUIPMENT DESCRIBED HEREIN IS LIMITED TO THE PARAMETERS DETAILED IN THE SPECIFICATIONS AND THE USES SET FORTH IN THE DESCRIPTIVE PASSAGES. ANY OTHER PROPOSED APPLICATION OF THIS EQUIPMENT SHOULD BE DOCUMENTED AND SUBMITTED IN WRITING TO :

MOHAWK LIFTS, LLC.

FOR EXAMINATION. THE USER ASSUMES FULL RESPONSIBILITY FOR ANY EQUIPMENT DAMAGE, PERSONAL INJURY, OR ALTERATION OF THE EQUIPMENT DESCRIBED IN THIS MANUAL OR ANY SUBSEQUENT DAMAGES.

DO NOT WELD, APPLY HEAT, OR MODIFY THIS EQUIPMENT IN ANY MANNER WITHOUT WRITTEN AUTHORIZATION FROM :

MOHAWK LIFTS, LLC.

CERTAIN ALLOY OR HEAT-TREATED COMPONENTS MAY BE DISTORTED OR WEAKENED, RESULTING IN AN UNSAFE CONDITION. MOHAWK LIFTS, LLC. IS NOT RESPONSIBLE FOR DISTORTIONS WHICH RESULT FROM WELDING ON THIS EQUIPMENT AFTER MANUFACTURING IS COMPLETED. UNAUTHORIZED WELDING, APPLICATION OF HEAT, OR MODIFICATION OF THIS EQUIPMENT VOIDS ANY AND / OR ALL APPLICABLE WARRANTIES COVERING THIS EQUIPMENT.

ALL WARRANTIES APPLICABLE TO THIS EQUIPMENT ARE CONTINGENT ON STRICT ADHERENCE TO THE MAINTENANCE SCHEDULES AND PROCEDURES IN THIS MANUAL.

KEEP ALL SHIELDS AND GUARDS IN PLACE. INSURE ALL SAFETY MECHANISMS ARE OPERABLE. KEEP HANDS, FEET, AND CLOTHING AWAY FROM POWER-DRIVEN AND MOVING PARTS.

THIS EQUIPMENT MUST BE INSTALLED ON A LEVEL CONCRETE FLOOR WITH A MINIMUM THICKNESS OF FIVE INCHES. THE CONCRETE MUST BE AGED AT LEAST TWENTY EIGHT DAYS PRIOR TO INSTALLATION AND HAVE A MINIMUM TENSILE STRENGTH OF FOUR THOUSAND P.S.I..

WARNING

- DO NOT INSTALL THIS UNIT IN A PIT OR DEPRESSION DUE TO FIRE OR EXPLOSION RISK

IMPORTANT

DO NOT INSTALL THIS UNIT ON ANY ASPHALT SURFACE.

DO NOT INSTALL THIS UNIT ON ANY SURFACE OTHER THAN CONCRETE CONFORMING TO THE MINIMUM SPECIFICATIONS STATED IN THE GENERAL FLOOR REQUIREMENTS.

DO NOT INSTALL THIS UNIT ON EXPANSION SEAMS OR ON CRACKED, DEFECTIVE CONCRETE. CHECK WITH BUILDING ARCHITECT.

DO NOT INSTALL THIS UNIT ON A SECOND FLOOR OR ANY GROUND FLOOR WITH A BASEMENT BENEATH WITHOUT WRITTEN AUTHORIZATION FROM THE BUILDING ARCHITECT.

APPENDAGES

INSTALL THIS EQUIPMENT ON CONCRETE ONLY

IF, FOR ANY REASON, A NEW CONCRETE SLAB SECTION IS REQUIRED, THE MINIMUM THICKNESS, STRENGTH, AND AGING ARE MANDATORY. FOR YOUR PROTECTION, CERTIFIED STRENGTH DOCUMENTATION SHOULD BE OBTAINED FROM THE FIRM WHO SUPPLIES THE CONCRETE MIXTURE AT THE TIME OF THE POUR. SPECIAL CONSIDERATION SHOULD BE MADE TO THE JOINING OF THE EXISTING FLOOR AND THE NEW SECTION BEING ADDED. CHECK WITH BUILDING ARCHITECT. THE SUGGESTED SIZE OF THE NEW CONCRETE SLAB SECTION IS IN THE, GENERAL FLOOR REQUIREMENTS. AND / OR THE FLOOR MODIFICATION DATA SHEET.

IMPORTANT NOTE

A LEVEL FLOOR IS SUGGESTED FOR A PROPER INSTALLATION SITE AND WILL ENSURE LEVEL LIFTING. IF A FLOOR IS OF QUESTIONABLE SLOPE, CONSIDER A SURVEY OF THE SIGHT AND / OR THE POSSIBILITY OF POURING A NEW LEVEL CONCRETE SLAB SECTION. SIMPLY STATED, FOR OPTIMUM LEVEL LIFTING, THE EQUIPMENT, AT BEST, CAN LIFT ONLY AS LEVEL AS THE FLOOR ON WHICH IT IS LOCATED... AND SHOULD NOT BE EXPECTED TO COMPENSATE FOR DRASTIC FLOOR SLOPE DIFFERENCES.

CAUTION

THE EQUIPMENT DESCRIBED IN THIS MANUAL COULD BE POTENTIALLY DANGEROUS IF IMPROPERLY OR CARELESSLY OPERATED. FOR THE PROTECTION OF ALL PERSONS AND EQUIPMENT, ONLY COMPETENTLY TRAINED OPERATORS WHO ARE CRITICALLY AWARE OF THE PROPER OPERATING PROCEDURES, POTENTIAL DANGERS, AND SPECIFIC APPLICATION OF THIS EQUIPMENT SHOULD BE ALLOWED TO TOUCH THE CONTROLS AT ANY TIME.

SAFE OPERATION OF THIS EQUIPMENT IS DEPENDENT ON USE IN COMPLIANCE WITH THE OPERATION PROCEDURES OUTLINED IN THIS MANUAL ALONG WITH THE MAINTENANCE AND INSPECTION PROCEDURES WITH CONSIDERATION OF PREVAILING CONDITIONS.

THE EQUIPMENT DESCRIBED IN THIS MANUAL IS NEITHER DESIGNED NOR INTENDED FOR ANY APPLICATION ALONE OR IN CONJUNCTION WITH ANY OTHER EQUIPMENT THAT INVOLVES THE LIFTING OR MOVING OF PERSONS.

ALWAYS CONSULT THE VEHICLE LIFTING GUIDE FOR THE PROPER LIFTING POINTS ON ANY VEHICLE. THESE GUIDES ARE AVAILABLE FROM THE VEHICLE MANUFACTURERS.

AFTER LIFTING THE VEHICLE TO THE DESIRED HEIGHT, ALWAYS LOWER THE UNIT ONTO THE MECHANICAL SAFETIES. THE FORMING OF GOOD OPERATIONAL WORK HABITS WILL ELIMINATE OVERSIGHTS IN THE USE OF PROVIDED SAFETY DEVICES.

WARNING:

ALL ACCESSORIES (I.E. LIFTING PADS, HEIGHT ADAPTORS, JACKING BEAMS, ETC.) SUPPLIED WITH THIS LIFT ARE TO BE USED ON THIS LIFT ONLY. ACCESSORIES FROM OTHER LIFTS ARE NOT ACCEPTABLE AND COULD RESULT IN INJURY TO THE USER.

WARNING:

LOADING OF THE JACKING BEAMS OR COMBINATION OF JACKING BEAMS ABOVE THE RATED CAPACITY OF THE LIFT ITSELF COULD RESULT IN PERSONAL INJURY TO THE OPERATOR AND/OR DAMAGE TO THE LIFT AND/OR VEHICLE. THE LOAD RATING OF ANY JACKING BEAM OR COMBINATION OF JACKING BEAMS ON THIS UNIT MUST NOT EXCEED THE RATED CAPACITY OF THE LIFT.

TR-SERIES STANDARD PACKING LIST

PACKED	QTY	PART NUMBER	DESCRIPTION
	2 EA	ZZ1070-A-005	LEG / POST ASSEMBLY (POST # 1 & 4)
	2 EA	ZZ1070-A-004	LEG / POST ASSEMBLY (POST # 3 & 2)
	2	050-010-008	CROSS RAIL
	1	075-010-005	MAINSIDE TRACK ASSEMBLY (25' STANDARD)
	1	050-011-013	OFF SIDE TRACK ASSEMBLY (25' STANDARD)
	2	075-050-004	DRIVE ON RAMP ASSEMBLY
	2	075-050-003	WHEEL STOP ASSEMBLY
	1	ZZ1070-A-008	CONTROL CONSOLE ASSEMBLY
	1	FILE MAN1312	PARTS BOX # 1
	1	FILE MAN1313	PARTS BOX # 2
	1	**FILE MAN1312**	**PARTS BOX # 1**
	1	075-050-021	MANUAL / INSTALL-OPER-MAINT (TR-SERIES)
	4	600-930-001	WHEEL CHOCKS
	2	050-000-179	TRACK STOPS (BOTTOM)
	2	050-000-157	TRACK STOPS (TOP)
	6	075-010-008	HYDRAULIC HOSE ASSEMBLIES
	1	601-800-070	WARRANTY REGISTRATION CARD PACKAGE
	1	**FILE MAN1313**	**PARTS BOX # 2**
	6	050-000-032	TUBING ASSEMBLY
	6	035-001-006	TUBING ASSEMBLY CLUSTER (W/T-FITTING)
	1	050-010-016	SMALL PARTS BAG
	6	601-630-002	SPRAY PAINT (YELLOW)
	6	601-630-001	SPRAY PAINT (RED)
	16	600-670-002	WEJ-IT ANCHOR (3/4 X 5)
	32	600-640-024	BOLT, 3/4 X 2-1/2 IN
	16	6000640-028	BOLT, 3/4 X 3-1/2 IN
	48	600-690-003	NUT 3/4 NF NLN
	4	050-000-160	CARRIAGE COVER PLATE
	2	050-010-115	CROSSRAIL LINE COVER (LEFT)
	2	050-010-116	CROSSRAIL LINE COVER (RIGHT)
	1	**050-010-016**	**SMALL PARTS BAG**
	10	600-740-003	SHIM, 1/4 IN BLACK
	10	600-740-002	SHIM, 1/8 IN RED
	10	600-740-001	SHIM, 1/16 IN BLUE
	1	601-610-002	THREAD SEALING COMPOUND
	2	600-640-012	BOLT 5/16 X 3/4 IN
	4	600-710-012	WASHER, FLAT 7/8 IN
	4	600-690-010	NUT 7/8 NF NLN
	4	600-870-005	SNAP RING
	4	600-870-004	SNAP RING
	12	600-640-069	BOLT, 3/8-16 NC x 1 ¾ LG
	24	600-710-009	WASHER, FLAT, 3/8
	12	600-680-012	NUT, PLAIN, 3/8-16 NC
	12	600-720-011	WASHER, LOCK, 3/8
	3	601-140-022	HOSE SUPPORT CLAMP
PACKED BY:			

INSTALLATION INSTRUCTIONS

IMPORTANT

READ THIS MANUAL IN ITS ENTIRETY. BE FAMILIAR WITH PART NAMES AND HAVE A GOOD UNDERSTANDING OF HOW THIS UNIT IS TO BE ASSEMBLED AND OF HOW INDIVIDUAL PARTS OPERATE. REFER TO ANSI/ALI ALIS, SAFETY REQUIREMENTS FOR INSTALLATION AND SERVICE OF AUTOMOTIVE LIFTS.

IMPORTANT

- INSTALL THE UNIT AS INDICATED ON THE LIFT VERIFICATION SHEET. YOU CANNOT REVERSE THE TRACK ONLY. THE UNIT CAN ONLY BE ROTATED IN ITS ENTIRETY.
- THE UNIT WILL NOT BE SECURELY MOUNTED TO THE FLOOR UNTIL THE UNIT HAS BEEN CYCLED AND OPERATES SMOOTHLY. USE EXTREME CAUTION AS NOT TO DISRUPT THE STABILITY OF THE UP-RIGHT POST. FAILURE TO DO SO COULD RESULT IN PERSONAL INJURY.

TO BEGIN

USE THE PACKING LIST IN THIS MANUAL AND VERIFY ALL SUPPLIED PARTS. IF MISSING PARTS ARE NOTED, THEY CAN BE OBTAINED BY CALLING 1-800-833-2006 OR BY CONTACTING YOUR LOCAL MOHAWK DISTRIBUTOR.

USING A CHALK LINE, LAYOUT THE FLOOR DIMENSIONS WHERE THE UNIT IS TO BE LOCATED.

NOTE

THE CARRIAGES AND CROSS RAILS ARE MATCHED DRILLED ONE, TWO, THREE, AND FOUR. THESE ARE REFERENCE MARKS ON THE TOP OF THE CROSS RAIL AND THE TOP PLATE ON THE ADJOINING CARRIAGE.

ALIGN POST ONE AND TWO INTO PLACE ON THE CHALK LINE LAYOUT.

NOTE

- POST TWO IS TO BE SET ONE FOOT OUT AWAY FROM POST ONE. UNTIL THE CROSS RAIL CHAINS HAVE BEEN ROUTED THROUGH THE CARRIAGES.
- VERIFY THAT THE THREE INTERNAL HYDRAULIC LINES IN BOTH CROSS RAILS ARE TIGHT BEFORE ASSEMBLY.

WARNING

- INSURE ALL HYDRAULIC LINE CONNECTIONS ARE LOCATED TO THE INSIDE OF THE UNIT

SET THE CROSSRAIL MARKED ONE AND TWO INTO PLACE BETWEEN POST ONE AND TWO IN THE CORRESPONDING ORIENTATION.

USING THE FISH TAPE ROUTE THE TWO EQUALIZING CHAINS THROUGH THE CROSS RAIL AND CARRIAGES. LAY THE EXCESS CHAIN ONTO THE CROSS RAIL.

WARNING

- DO NOT CROSS OR TWIST THE EQUALIZING CHAINS WHEN FISHING THEM THROUGH THE CROSS RAIL. ALWAYS VERIFY THIS USING A DROP LIGHT OR FLASH LIGHT. FAILURE TO DO SO COULD RESULT IN PERSONAL INJURY.

INSTALLATION INSTRUCTIONS

ALIGN THE CROSS RAIL MOUNTING HOLES WITH THE MOUNTING HOLES ON THE CARRIAGE ON POST NUMBER ONE. WHEN THE CROSS RAIL IS IN PLACE, INSERT AND HAND TIGHTEN THE EIGHT 3/4 - 16 NF X 2 - 1/2 IN BOLT AND 3/4 - 16 NF NYLON LOCK NUT.

ALIGN THE CROSS RAIL MOUNTING HOLES WITH THE MOUNTING HOLES ON THE CARRIAGE ON POST NUMBER TWO. WHEN THE CROSS RAIL IS IN PLACE, INSERT AND HAND TIGHTEN THE EIGHT 3/4 - 16 NF X 2 - 1/2 IN BOLT AND 3/4 - 16 NF NYLON LOCK NUT.

FULLY TIGHTEN THE SIXTEEN CROSS RAIL MOUNTING BOLTS TO 420 FOOT POUNDS.

CONNECT THE TWO EQUALIZING CHAINS TO THE TOP OF POST ONE AND TWO.

TIGHTEN THE NYLON LOCK NUT SO THAT THE THREADS OF THE CHAIN CONNECTOR PROTRUDE PAST THE NYLON BY AT LEAST THREE THREADS.

PLACE THE MAIN AND OFF SIDE TRACK INTO POSITION ON THE CROSS RAIL. ELEVATE THE TRACKS OFF OF THE CROSS RAIL USING THE 4 X 4 X 12 IN DUNNAGE.

NOTE

- THE MAIN SIDE TRACK IS TO BE LOCATED ON THE SIDE WITH THE CONTROL CONSOLE. REFERENCE LIFT VERIFICATION SHEET

ALIGN POST THREE AND FOUR INTO PLACE ON THE CHALK LINE LAYOUT.

POST THREE IS TO BE SET ONE FOOT OUT AWAY FROM POST FOUR UNTIL THE CROSS RAIL CHAINS HAVE BEEN ROUTED THROUGH THE CARRIAGES.

SET THE CROSS RAIL MARKED THREE AND FOUR INTO PLACE BETWEEN POST THREE AND FOUR IN THE CORRESPONDING ORIENTATION.

USING THE FISH TAPE ROUTE THE TWO EQUALIZING CHAINS THROUGH THE CROSS RAIL. AND CARRIAGES. LAY THE EXCESS CHAIN ONTO THE CROSS RAIL.

WARNING

- DO NOT CROSS OR TWIST THE EQUALIZING CHAINS WHEN FISHING THEM THROUGH THE CROSS RAIL. ALWAYS VERIFY THIS USING A DROP OR FLASH LIGHT. FAILURE TO DO SO COULD RESULT IN PERSONAL INJURY.

ALIGN THE CROSS RAIL MOUNTING HOLES WITH THE MOUNTING HOLES ON THE CARRIAGE ON POST NUMBER THREE. WHEN THE CROSS RAIL IS IN PLACE, INSERT AND HAND TIGHTEN THE EIGHT 3/4 - 16 NF X 2 - 1/2 IN BOLT AND 3/4 - 16 NF NYLON LOCK NUT.

ALIGN THE CROSS RAIL MOUNTING HOLES WITH THE MOUNTING HOLES ON THE CARRIAGE ON POST NUMBER FOUR. WHEN THE CROSS RAIL IS IN PLACE, INSERT AND HAND TIGHTEN THE EIGHT 3/4 - 16 NF X 2 - 1/2 IN BOLT AND 3/4 - 16 NF NYLON LOCK NUT.

FULLY TIGHTEN THE SIXTEEN CROSS RAIL MOUNTING BOLTS TO 420 FOOT POUNDS.

CONNECT THE TWO EQUALIZING CHAINS TO THE TOP OF POST THREE AND FOUR.

TIGHTEN THE NYLON LOCK NUT SO THAT THE THREADS OF THE CHAIN CONNECTOR PROTRUDE PAST THE NYLON BY AT LEAST THREE THREADS.

INSTALLATION INSTRUCTIONS

ASSEMBLE THE TWELVE HYDRAULIC LINE ASSEMBLIES MARKED ONE, TWO, THREE, AND FOUR ONTO THE CARRIAGE AND TRACKS. DO NOT CROSS THREAD OR OVER TIGHTEN THE CONNECTORS.

ASSEMBLE THE SIX 40.50 IN HYDRAULIC HOSES TO THE FORE AND AFT END OF THE UNIT. (CONNECTIONS ON THE MAIN SIDE TRACK .FROM THE CARRIAGE TO THE CROSS RAIL)

MOVE THE CONTROL CONSOLE INTO PLACE BESIDE THE MAIN SIDE TRACK. (CENTERED, APPROXIMATELY FOUR FOOT FROM THE TRACK)

ASSEMBLE THE FOUR HYDRAULIC HOSE ASSEMBLIES FROM THE CONTROL CONSOLE TO THE MAIN SIDE TRACK.

ASSEMBLE THE HUBBLE PLUG FROM THE CONTROL CONSOLE TO THE SELF LEVELING DEVICE.

IMPORTANT

- AT THIS TIME HAVE A QUALIFIED LICENSED ELECTRICIAN CONNECT THE POWER SUPPLY TO THE CONTROL CONSOLE.

IMPORTANT

USING THE TEXT AND DIAGRAM, FAMILIARIZE YOURSELF WITH THE CONTROL CONSOLE FUNCTIONS.

PRE-STARTUP

- INSURE ALL HYDRAULIC CONNECTIONS ARE PROPERLY TIGHTENED.
- PLACE THE AUTO / MANUAL SWITCH ON THE CONTROL PANEL CONSOLE TO THE MANUAL POSITION.
- PLACE THE HIGH / LOW SWITCH ON THE CONTROL PANEL CONSOLE TO THE LOW POSITION.
- VERIFY THE MOTOR ROTATION.
- ENSURE ALL DEBRIS AND PERSONAL HAVE BEEN REMOVED FROM THE LIFTING AREA..
- PLACE THE POWER UNIT STARTER SWITCH ON THE CONTROL PANEL TO THE ON POSITION. OBSERVE THE POWER INDICATOR LIGHT.

FOLLOWING THE PROCEDURES FOR RAISING AND LOWERING THE UNIT, RAISE THE UNIT APPROXIMATELY ONE FOOT. INSURE THAT THE TRACKS HAVE SEATED THEMSELVES INTO THE ALIGNMENT TABS ON THE CROSS RAIL ADJUST AS NEEDED.

CYCLE THE UNIT TWO TO THREE TIMES. OBSERVE EVEN AND SMOOTH OPERATION USE THE PROVIDED SHIMS TO LEVEL POST ONE, TWO, THREE, AND FOUR.

ASSEMBLE THE TWO TRACK STOPS TO THE FORE END OF THE MAIN AND OFF SIDE TRACK USING THE EIGHT 3/4 - 16 NF X 3 - 1/2 IN BOLTS AND 3/4 - 16 NF NYLON LOCK NUTS.

CHECK ALL HYDRAULIC FITTINGS FOR LEAKS. TIGHTEN AS REQUIRED.

SNAP INTO PLACE THE FOUR CARRIAGE ACCESS COVER PLATES ONTO THE CARRIAGES

ASSEMBLE THE FOUR HYDRAULIC LINE COVER PLATES ONTO THE CROSS RAIL USING THE TWELVE HEX HEAD 5/16 - 24 NF X 5/8 IN SELF TAPPING BOLTS.

FOLLOWING THE INSTRUCTIONS FOR RAISING AND LOWERING THE UNIT, AGAIN CYCLE THE UNIT. AFTER RAISING THE UNIT FULLY LOWER THE UNIT.

WITH THE UNIT FULLY LOWERED, ADJUST ALL FOUR EQUALIZING CHAINS TO REMOVE ANY REMAINING SLACK. ALL FOUR CHAINS ARE TO BE TAUT.

LIFT FINAL CHECKOUT (AFTER INSTALLATION):
REV (4/4/2011)

THIS PROCEDURE OUTLINES THE FINAL CHECKS TO MAKE AFTER INITIAL INSTALLATION OF THE LIFT UNIT. REPEAT THIS PROCEDURE IF THE LIFT IS RELOCATED.

AFTER THE LIFT IS FULLY ASSEMBLED, RAISE THE LIFT EMPTY A FEW TIMES TO VERIFY:

- PROPER SYNCHRONIZATION OF TRACKS AND CROSSRAILS
- UNIT IS RAISING SMOOTHLY (AIR IS BLEED FROM HYDRAULIC SYSTEM - SEE BLEEDING PROCEDURE FOR MORE DETAILS)
- NO LEAKS PRESENT AT ANY FITTING JUNCTIONS
- LOCKS ARE ENGAGING ON ALL POSTS SIMULTANEOUSLY AS LIFT IS RAISING (MAKE ADJUSTMENTS AS NEEDED)
- LOCKS ARE DIS-ENGAGING ON ALL POSTS WHEN LOCK RELEASE BUTTON DEPRESSED.
- LOCKS ARE RE-ENGAGING AFTER DIS-ENGAGED.
- LIFT IS NOT DRIFTING DOWN WHEN RAISED (RAISE LIFT, THEN STOP, AND VERIFY DRIFT DOWN OF CYLINDERS)
- NO VIBRATIONS FROM LOOSE CLAMPING, ETC.

ONCE THIS IS COMPLETE, LOCATE A REPRESENTATIVE VEHICLE INTO THE LIFTING AREA. USE A VEHICLE THAT WEIGHS AT LEAST 50 PERCENT OF THE CAPACITY OF THE LIFT.
OBSERVING LIFTING PROCEDURES CONTAINED IN THIS MANUAL TO POSITION THE VEHICLE ONTO THE LIFT.

RAISE LIFT APPROXIMATELY 1 FOOT. VERIFTY THE FOLLOWING:

- PROPER SYNCHRONIZATION OF TRACKS AND CROSSRAILS
- NO LOOSENING OF REAR ANCHOR BOLTS IN BASE PLATES AT FLOOR (LOOK FOR GAP BETWEEN FLOOR AND BASES)
- UNIT IS RAISING SMOOTHLY (AIR IS BLEED FROM HYDRAULIC SYSTEM - SEE BLEEDING PROCEDURE FOR MORE DETAILS)
- NO LEAKS PRESENT AT ANY FITTING JUNCTIONS
- LOCKS ARE ENGAGING ON ALL POSTS SIMULTANEOUSLY AS LIFT IS RAISING (SOME VARIANCE EXPECTED)
- LIFT IS NOT DRIFTING DOWN WHEN RAISED (RAISE LIFT, THEN STOP, AND VERIFY DRIFT DOWN OF CYLINDERS)
- NO VIBRATIONS FROM LOOSE CLAMPING, ETC.

PRESS LOCK RELEASE AND LOWER UNIT. VERIFY THE FOLLOWING:

- PROPER SYNCHRONIZATION OF TRACKS AND CROSSRAILS
- UNIT IS LOWERING SMOOTHLY (AIR IS BLEED FROM HYDRAULIC SYSTEM - SEE BLEEDING PROCEDURE FOR MORE DETAILS)
- NO LEAKS PRESENT AT ANY FITTING JUNCTIONS
- NO VIBRATIONS FROM LOOSE CLAMPING, ETC.
- LOCKS ARE NOT RE-ENGAGING WHILE LOWERING

RAISE LIFT TO FULL STROKE. VERIFY THE FOLLOWING:

- PROPER SYNCHRONIZATION OF TRACKS AND CROSSRAILS
- NO LOOSENING OF REAR ANCHOR BOLTS IN BASE PLATES AT FLOOR (LOOK FOR GAP BETWEEN FLOOR AND BASES)
- UNIT IS RAISING SMOOTHLY (AIR IS BLEED FROM HYDRAULIC SYSTEM - SEE BLEEDING PROCEDURE FOR MORE DETAILS)
- NO LEAKS PRESENT AT ANY FITTING JUNCTIONS
- LOCKS ARE ENGAGING ON ALL POSTS SIMULTANEOUSLY AS LIFT IS RAISING (SOME VARIANCE EXPECTED)
- LIFT IS NOT DRIFTING DOWN WHEN RAISED (RAISE LIFT, THEN STOP, AND VERIFY DRIFT DOWN OF CYLINDERS)
- NO VIBRATIONS FROM LOOSE CLAMPING, ETC.

LOWER LIFT ONTO LOCKS. VERIFY THE FOLLOWING:

- ALL LOCKS ARE ENGAGING UPON DESCENT
- PROPER SYNCHRONIZATION OF TRACKS

RAISE LIFT 3 INCHES, THEN RELEASE LOCKS AND LOWER VEHICLE TO FLOOR. VERIFY THE FOLLOWING:

- PROPER SYNCHRONIZATION OF TRACKS AND CROSSRAILS.
- UNIT IS RAISING & LOWERING SMOOTHLY (AIR IS BLEED FROM HYDRAULIC SYSTEM - SEE BLEEDING PROCEDURE FOR MORE DETAILS)
- NO LEAKS PRESENT AT ANY FITTING JUNCTIONS
- NO VIBRATIONS FROM LOOSE CLAMPING, ETC.
- LOCKS ARE NOT RE-ENGAGING WHILE LOWERING
- NO LOOSENING OF REAR ANCHOR BOLTS IN BASE PLATES AT FLOOR (LOOK FOR GAP BETWEEN FLOOR AND BASES)

ENSURE THAT ALL MANUALS AND OTHER INSTRUCTIONAL MATERIALS ARE DELIVERED TO OWNER/USER/EMPLOYER.
ENSURE THAT USERS ARE INSTRUCTED IN THE SAFE AND PROPER USER OF THE LIFT.
THIS ENDS THE FINAL CHECKOUT OF LIFT.

4-POST LIMITATIONS:
REV (4/4/2011)

4-POST LIMITATIONS:

ALL MOHAWK 4-POST LIFTS ARE FOR INDOOR USE UNLESS SPECIFICALLY QUALIFIED AND MODIFIED FOR A CUSTOM ENVIRONMENT.

ALL MOHAWK 4-POST LIFTS MUST ACCOMPLISH THREE MAIN CRITERIA IN ORDER TO LIFT A VEHICLE SAFELY:

1. **PROPER CAPACITY.** ALL 4-POST RUNWAY LIFTS ARE DESIGNED TO LIFT STANDARD VEHICLES WITHIN THEIR RATED CAPACITY WITHIN THE CAPACITY OF THE LIFT RATING. ANY VEHICLES EXCEEDING THE CAPACITY MUST NOT BE RAISED.
2. **PROPER CENTER OF GRAVITY PLACEMENT OF VEHICLE ON LIFT** ENSURE THAT THE CENTER OF GRAVITY OF THE VEHICLE LIES CENTERED ALONG THE LENGTH OF THE TRACKS. WITH RESPECT TO HEAVY ENDED VEHICLES SUCH AS FORK TRUCKS, DELIVERY VANS, PICKUP TRUCKS, ETC, THE VEHICLE MAY NEED TO BE POSITIONED FORWARD OR REARWARD TO CENTER THE LOAD ON THE TRACKS. ALSO, THE VEHICLE SHOULD BE CENTERED SIDE TO SIDE ON THE LIFT TRACKS AS WELL.
3. **PROPER CHOCKING OF TIRES.** USE CHOCKS SUPPLIED, AND CHOCK TIRES ON BOTH TRACKS.

SPECIAL SAFETY PRECAUTIONS MUST BE OBSERVED IN APPLICATIONS INVOLVING VERY LONG AND VERY SHORT WHEELBASE VEHICLES. THE WHEEL BASE RANGE ON VERY LONG VEHICLE MAY NOT ALLOW FOR PROPER POSITIONING OF TIRES ON TRACKS TO GET THE CENTER OF GRAVITY OF THE VEHICLES CENTERED WITH THE CENTER OF THE TRACK LENGTH. SHORT WHEEL BASE VEHICLES MAY OVERLOAD THE CENTRAL LENGTH OF THE TRACKS. AS A RULE OF THUMB, ALL MOHAWK 4-POST RUNWAY LIFTS ARE DESIGNED TO ACCOMMODATE WHEEL BASES THAT ARE ~3 FEET SHORTER THAN THE LENGTH OF THE TRACKS (MORE IF VEHICLES ARE FAIRLY EVENLY LOADED FRONT TO REAR) AND WHEEL BASES AS SHORT AS 10 FEET (LESS IF VEHICLES ARE LIGHTER). REFER TO VEHICLE MANUFACTURER GUIDELINES FOR PROPER LIFTING TECHNIQUES.

PRIOR TO LIFTING LOW PROFILE VEHICLES, RAMPS SHOULD BE CHECKED TO ENSURE PROPER CLEARANCE FOR ENTRY AND BREAK OVER OF THE VEHICLE UNDERCARRIAGE. (IE. STRETCHED LIMOS.). LONGER RAMPS MAY BE REQUIRED.

THIS LIFT IS NOT INTENDED, NOR DESIGNED, TO LIFT VEHICLE BY ONLY THE FRONT OR ONLY THE BACK ENDS.

THIS LIFT IS NOT INTENDED TO BE DRIVEN ON TO OR OFF OF, UNLESS WHEN IT IS FULLY LOWERED.
(THIS IS NOT AN ELEVATOR LIFT).
THIS LIFT IS NOT INTENDED FOR THE LIFTING OF PEOPLE.

CARE MUST BE OBSERVED WHEN REMOVING ANY HEAVY COMPONENTS FROM A VEHICLE AND THEREBY DRASTICALLY SHIFTING THE VEHICLE CENTER OF GRAVITY (I.E. ENGINE REMOVAL, TRANSMISSION REMOVAL, ETC.). THE USE OF JACK STANDS AT THE FRONT AND REAR ENDS OF THE VEHICLE IS HIGHLY RECOMMENDED WHEN PERFORMING THIS TYPE OF WORK.

SAFETY TIPS

PLEASE POST THE SAFETY TIPS (COPY IN PARTS BOX) IN A PLACE WHERE THE OPERATOR WILL BE CONSTANTLY REMINDED OF THEIR IMPORTANCE. ALWAYS REFER TO THE LIFTS SPECIFIC SAFETY, OPERATING AND MAINTENANCE INSTRUCTIONS.

- OPERATING VALVES, SWITCHES, AND LOCKING DEVICES ARE DESIGNED FOR MAXIMUM SAFETY. NEVER ATTEMPT TO BLOCK OR OVERRIDE THEM.
- NEVER OVERLOAD YOUR LIFT BEYOND STATED LIFTING CAPACITY.
- DO NOT ALLOW CUSTOMERS OR BY-STANDERS TO OPERATE THE LIFT OR TO BE IN A LIFTING AREA DURING ITS OPERATION. ONLY PROPERLY TRAINED PERSONNEL SHOULD BE ALLOWED TO OPERATE LIFT.
- NEVER RAISE VEHICLE WITH ANYONE INSIDE IT.
- BE SURE WORK AREA AROUND THE LIFT IS CLEAR AND FREE OF OBSTRUCTIONS.
  (DEBRIS, GREASE, OIL)
- NEVER ATTEMPT TO OPERATE A LIFT IF IT APPEARS TO BE MALFUNCTIONING OR IF BROKEN OR DAMAGED PARTS ARE EVIDENT.
- FULLY LOWER THE UNIT BEFORE LOADING OR UNLOADING A VEHICLE.
- LOAD LIFT CAREFULLY. AVOID QUICK STOPS AND STARTS.
- PERFORM THE PRE-OPERATION CHECK LIST, PER INSTRUCTIONS, BEFORE RAISING VEHICLE TO DESIRED HEIGHT.
- BEFORE REMOVING VEHICLE FROM THE LIFT AREA, REMOVE THE WHEEL CHOCKS TO ASSURE THAT VEHICLE OR LIFT WILL NOT BE DAMAGED.

CONTROL PANEL FUNCTIONS DEFINITIONS

NUMBERS PREFIXED INDICATES REFERENCE NUMBER ON FIGURE (NEXT PAGE)

1. FORE PRESSURE GAUGE:
- INDICATES THE PRESSURE IN THE CYLINDERS AT THE FORE END OF THE UNIT.

2. AFT PRESSURE GAUGE:
- INDICATES THE PRESSURE IN THE CYLINDERS AT THE AFT END OF THE UNIT.

3. POWER ON INDICATOR LIGHT:
- INDICATES UNIT IS ON.

4. POWER OFF SWITCH (RED):
- TURNS UNIT OFF.

5. LEVEL CONTROL SWITCH:
- SETS MODE OF MONITORING THE LEVEL OF THE UNIT, EITHER MANUALLY OR AUTOMATICALLY.

6. DOWN SETTLE SWITCH:
- BYPASSES HYDRAULIC SAFETIES TO ALLOW UNIT TO REST COMPLETELY ON MECHANICAL LOCKS. ALLOWS TOTAL RELIEF OF PRESSURE IN FORE AND AFT CYLINDERS.

7. POWER ON SWITCH:
- TURNS UNIT ON.

8. LOCK RELEASE BUTTON:
- ALLOWS AIR TO ENERGIZE THE LOCK RELEASE SYSTEM. LIFT MUST BE RAISED OFF OF LOCK POSITIONS TO ENABLE LOCKS TO BE RELEASED.

9. UP BUTTON:
- ALLOWS FLUID TO ENERGIZE THE LIFTING CYLINDERS.

10. FORE CONTROL BUTTON:
- WITH LEVEL CONTROL SWITCH IN THE MANUAL MODE, ALLOWS OPERATOR TO MANUALLY ADJUST THE FORE END OF THE LIFT UP WHEN IT IS LOW. (INOPERABLE WHEN THE LEVEL CONTROL SWITCH IS IN THE AUTO MODE)

11. FORE LEVEL INDICATOR LIGHT:
- WITH THE LEVEL CONTROL SWITCH IN AUTO, WILL ILLUMINATE WHEN THE FORE END OF LIFT IS LOW. (WHEN THE LEVEL CONTROL SWITCH IS IN THE MANUAL MODE, LIGHT ILLUMINATES WHEN FORE BUTTON PRESSED)

12. DOWN BUTTON:
- WHEN USED IN CONJUNCTION WITH THE LOCK RELEASE BUTTON, ALLOWS THE LOWERING OF THE LIFTING CYLINDERS. WHEN USED WITHOUT THE LOCK RELEASE BUTTON, ALLOWS LIFT TO BE LOWERED ON MECHANICAL LOCKS.

13. AFT CONTROL BUTTON:
- WITH LEVEL CONTROL SWITCH IN MANUAL, ALLOWS OPERATOR TO MANUALLY ADJUST THE AFT END OF THE LIFT UP WHEN IT IS LOW. (INOPERABLE WHEN THE LEVEL CONTROL SWITCH IS IN THE AUTO MODE)

14. AFT LEVEL INDICATOR LIGHT:
- • WITH THE LEVEL CONTROL SWITCH IN AUTO, WILL ILLUMINATE WHEN THE AFT END OF LIFT IS LOW.(WHEN THE LEVEL CONTROL SWITCH IS IN THE MANUAL MODE, LIGHT ILLUMINATES WHEN AFT BUTTON PRESSED)

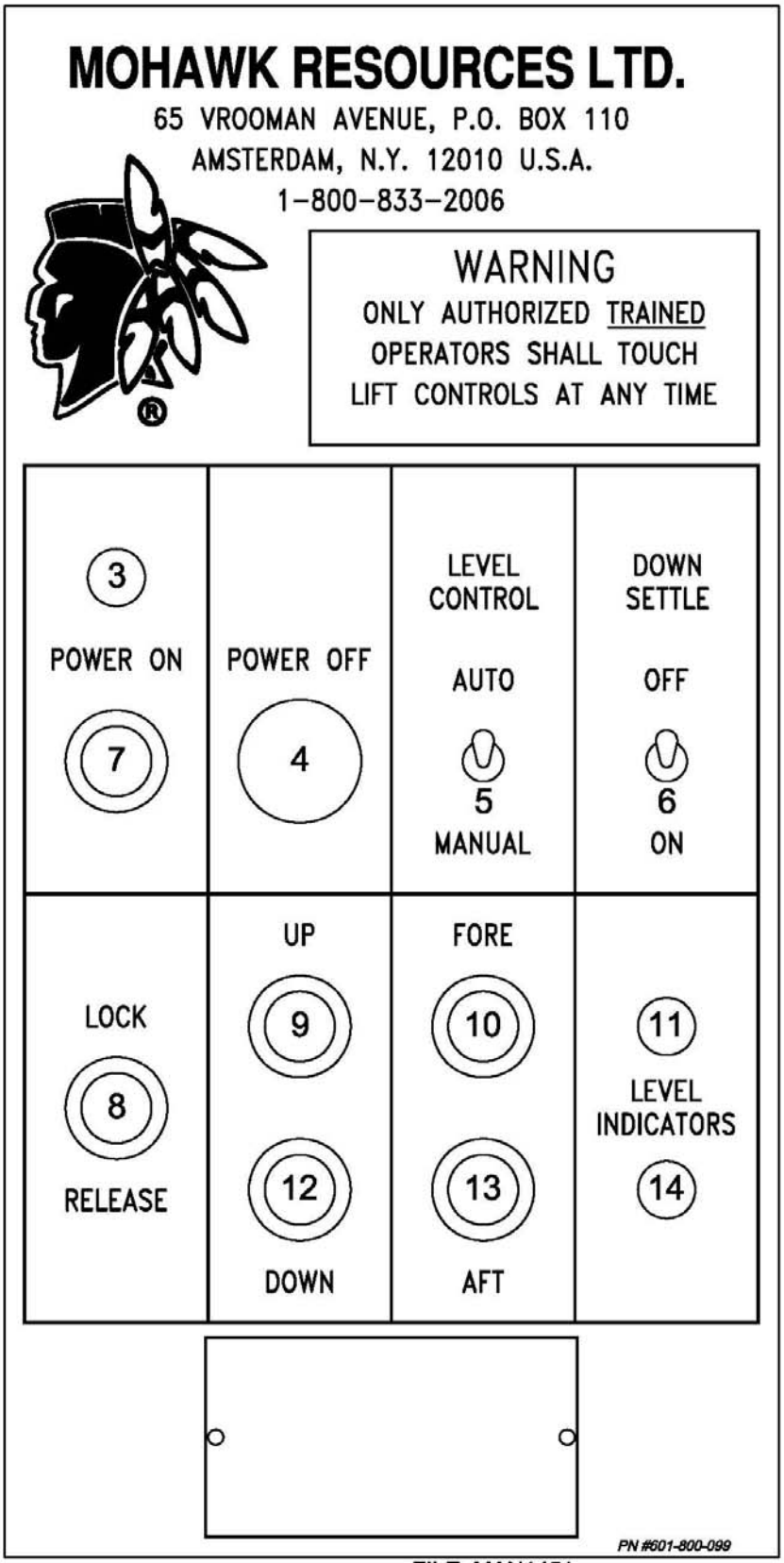

FILE: MAN1451

PRE OPERATION CHECK LIST

TRAINED OPERATOR

- THE OPERATOR MUST BE FULLY TRAINED AND QUALIFIED TO SAFELY AND EFFECTIVELY OPERATE THIS EQUIPMENT OF THIS SPECIFIC MAKE AND MODEL.

ABSENCE OF OBSTRUCTIONS

- THE TOTAL WORK AREA MUST BE FREE OF ANY AND ALL OBSTRUCTIONS AND BE GENERALLY CLEAN. (FREE OF OIL AND DEBRIS)

VISUAL INSPECTION

- THOROUGHLY INSPECT THE UNIT WITH A TRAINED EYE, NOTING ANY PROBABLE PROBLEM AREA. INSPECT THE FLOOR AND THE ANCHORING FASTENERS AS WELL. REPORT ANY QUESTIONABLE ITEMS.

NO LOAD PERFORMANCE CHECK

- ALL MECHANICAL SAFETIES OPERATE PROPERLY AND CONSISTENTLY.
- NO EXTERNAL FLUID LEAKS.
- NO BLEED DOWN.
- EFFORTLESS AND SIMULTANEOUS MOVEMENT.
- LEVEL LIFTING.
- CONTROLS FUNCTION PROPERLY.
- ALL SAFETY MECHANISMS FULLY FUNCTIONAL.

PREVIOUS DAY' S OPERATION REPORT

- VERIFY WITH SUPERVISOR THAT THERE WERE NO PROBLEMS EXPERIENCED DURING THE PREVIOUS DAY'S USAGE. IF THERE WERE ANY PROBLEMS, VERIFY THAT ALL NECESSARY REPAIRS HAVE BEEN COMPLETED.

LIFTING PROCEDURES

PLACING VEHICLE ON LIFT

- PERFORM PRE-OPERATION CHECK LIST ITEM BY ITEM.
- POSITION THE VEHICLE ONTO THE UNIT SO THAT ALL TIRES ARE SECURELY ON THE TRACKS. REFER TO “LIFTING IT RIGHT” MANUAL AND ANSI/SAE J2184-OCT92 FOR VEHICLE LIFT POINTS AND PROPER STANDARD LIFTING PRACTICES.
- CENTER THE VEHICLE SO THAT THE WEIGHT IS DISTRIBUTED EVENLY FORE AND AFT. THIS CAN BE VERIFIED BY MONITORING THE PRESSURE GAUGES ON THE CONTROL CONSOLE PANEL. THE READINGS SHOULD BE THE SAME OR WITHIN 300 P.S.I. THE LIFT MAY NEED TO BE RAISED SLIGHTLY TO OBTAIN THESE PRESSURE READING.
- PLACE THE WHEEL CHOCKS IN A POSITION SO THAT THE VEHICLE WILL BE SECURE ON THE UNIT.

TO RAISE

- TURN ON THE POWER UNIT.
- SIMULTANEOUSLY PRESS & HOLD THE LOCK RELEASE THEN THE UP BUTTON.
- RAISE VEHICLE TO THE DESIRED WORKING HEIGHT. RELEASE BUTTONS.
- LOWER THE UNIT ONTO THE MECHANICAL SAFETIES BY PRESSING THE DOWN SETTLE BUTTON UNTIL THE GAUGES BOTH READ APPROXIMATELY ZERO.
- TURN OFF THE POWER UNIT

TO LOWER

- INSPECT THE LIFTING AREA TO INSURE THAT ALL PERSONNEL AND DEBRIS HAVE BEEN CLEARED FROM THE LIFTING AREA.
- TURN ON THE POWER UNIT.
- SIMULTANEOUSLY PRESS & HOLD THE LOCK RELEASE AND THE UP BUTTON.
- RAISE UNIT APPROXIMATELY TWO INCHES. RELEASE THE UP BUTTON ONLY, STILL HOLDING THE LOCK RELEASE BUTTON AND THEN PRESS THE DOWN BUTTON.
- CONTINUE TO HOLD THE BUTTONS UNTIL THE TRACKS ARE AT THE DESIRED HEIGHT OR ARE FULLY LOWERED AND DOWNWARD MOTION HAS HALTED.
- IF LOWERING ONTO MECHANICAL SAFETIES, RELEASE BOTH BUTTONS, THEN PRESS THE DOWN SETTLE BUTTON UNTIL THE GAUGES BOTH READ APPROXIMATELY ZERO.
- IF LOWERING TO THE FLOOR, LOWER FULLY UNTIL UNIT STOPS, RELEASE DOWN BUTTON ONLY, AND WHILE MAINTAINING LOCK RELEASE BUTTON, PRESS THE DOWN SETTLE BUTTON UNTIL THE GAUGES BOTH READ APPROXIMATELY ZERO.
- TURN OFF THE POWER UNIT

NOTE: IF FOR ANY REASON, THE LIFT BECOMES INOPERATIVE IN THE RAISED POSITION WITH A VEHICLE ON IT, CONTACT. OUR LOCAL MOHAWK REPRESENTATIVE OR THE MOHAWK FACTORY.

MAINTENANCE PROCEDURES

DAILY

- PERFORM PRE-OPERATION CHECK LIST.
- REPORT ANY AND ALL EQUIPMENT MALFUNCTIONS IMMEDIATELY.
- CLEAN AND LUBRICATE ALL MOVING PARTS.
- KEEP AREA AROUND THIS EQUIPMENT FREE OF DIRT, SAND, WATER, ETC.

WEEKLY

- WIPE CLEAN, THE CYLINDERS WIPER SEALS AND THE BASE OF EACH POST TO REMOVE WEEPING OIL AND DUST.
- VERIFY FLUID LEVEL. WITH UNIT FULLY LOWERED, LEVEL INDICATOR ON RESERVOIR IS TO READ FULL. USE DEXRON II AS REPLACEMENT FLUID.

MONTHLY

- INSPECT ALL HYDRAULIC COMPONENTS FOR LEAKS, AND DEFORMATION DUE TO WEAR OR CORROSION.
- TIGHTEN ALL FASTENERS AND HYDRAULIC FITTINGS.
- INSPECT ANCHOR CONDITIONS FOR ANY POSSIBLE CORROSION AND INSPECT THE FLOOR CONDITION FOR ANY SIGNS OF FATIGUE.
- CLEAN AND LUBRICATE CHAINS WITH A LIGHT CHAIN LUBRICANT. (DO NOT USE HEAVY GREASE) REMOVE CAP IN CENTERS OF CROSSRAILS TO VISUALLY INSPECT CHAINS THAT ARE ROUTED THROUGH CROSSRAILS. ALSO, REMOVE COVERS FROM CARRIAGES TO VISUALLY INSPECT CHAIN AT BEARING LOCATIONS.

SEMI- ANNUAL

- RE QUALIFY ALL PERSONNEL IN THE SAFE OPERATION OF THIS UNIT.
- VERIFY ALL FASTENERS TO PROPER TORQUE:
  CROSSRAIL BOLTS TO 250 FT-LB
  LIFTING ROD NUTS TO 1200 FT-LB
  ANCHORS (SEE ANCHOR SPECIFICATION SECTION)
- LUBRICATE LOCK BODY MAIN PIVOT PINS. REMOVE WITH SNAP RING PLIERS WHEN FULLY LOWERED AND CLEAN LOCK PIVOT PIN AND LOCK BODY HOLE. SPRAY PIN WITH A LIGHT LUBRICANT (WD-40 OR EQUIVALENT), THEN RE-ASSEMBLE, ENSURING SMOOTH MOTION.
- THE CHANNEL SECTIONS WHERE THE CARRIAGE BEARINGS RIDE AGAINST SHOULD BE CLEANED AND LUBRICATED USING SLIP PLATE OR A LIGHT LUBRICANT (WD-40).
- THE MAIN CARRIAGE BEARINGS ARE FACTORY LUBRICATED AND SEALED. THEY DO NOT REQUIRE ANY ADDITIONAL PERIODIC LUBRICATION. HOWEVER, IF ADDITIONAL LUBRICATION IS DESIRED ON THESE UNDER THE CUSTOMER'S OWN INSPECTION AND MAINTENANCE PROGRAM, IT IS RECOMMENDED TO USE CAM2 – MULTIPURPOSE #2 GREASE (PART NO. 86035) OR EQUIVALENT. USE APPROXIMATELY 2 OZ. PER BEARING.

ANNUALLY

- CHECK YOUR HYDRAULIC FLUID ANNUALLY. EVRY FIVE YEARS REPLACE AND RE-BLEED THE HYDRAULIC FLUID. ALWAYS USE A CLEAN FUNNEL AND FILTER.
- REPLACE HYDRAULIC FLUID FILTER ELEMENT.
- INSPECT ALL FLANGE BEARINGS FOR UNUSUAL OR EXCESSIVE WEAR.
- PERFORM THE DAILY, WEEKLY, AND MONTHLY MAINTENANCE.
- REMOVE AND INSPECT SAFETY LOCKING BARS AND WEDGES.

PART REPLACEMENT NOTES

- REPLACE ALL WORN OR BROKEN PARTS WITH GENUINE LIFT MANUFACTURER SUPPLIED PARTS (FROM MOHAWK LIFTS, LLC. ONLY)
- ALL REPLACEMENTS OF PARTS ARE TO BE PERFORMED BY TRAINED LIFT SERVICE PERSONNEL ONLY.
- UPON PART REPLACEMENT, LIFT MUST PASS A FULL LIFT INSPECTION AS DEEMED SUITABLE BY TRAINED LIFT SERVICE PERSONNEL.

CHAIN INSPECTION - MAINTENANCE PROCEDURES:

The following checks to be performed MONTHLY:

Inspect for contamination.
Visually inspect chain for areas of dirt/debris and any areas showing evidence of rust/corrosion. If dirty, clean chain using a light lubricant (WD-40) - 0.5 oz. per foot by spraying.

Inspect for corrosion.
If excessive rust or corrosion is witnessed, replace chain.

Inspect chain link pins.
Visually inpect link pins for wear on both ends, ensuring that pins retain links. If any links are loose or worn, replace chain.

Inspect chain links.
Inspect links for wear on surfaces in contact with yoke rollers. Inspect yoke rollers as well. If excessive wear is found, replace both chain and rollers.

Inspect for excessive chain stretch.
Measure 16 pitches of chain while taut (see picture to right). Dimension should be no more than 12 3/8. If longer, replace chain.

Note: It is a rule-of-thumb that when the chain is replaced, the yoke rollers are replaced as well.

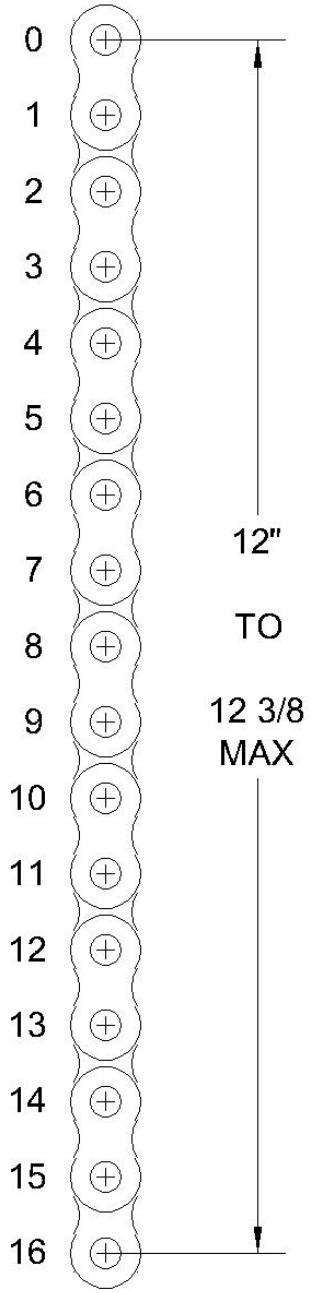

File: Man133.dwg
RevA - Chain Acceptabliity Limit Changed to Match
ALI Inspection criteria. (Was 12 1/4)

TROUBLE SHOOTING CHART

WARNING: NEVER ATTEMPT TO LOOSEN HYDRAULIC FITTINGS, OR OVERRIDE SAFETY DEVICES IN AN ATTEMPT TO CORRECT A PROBLEM. ALL SERVICES ARE TO BE PERFORMED WITH **NO** VEHICLE ON THE UNIT.

POSSIBLE CAUSE	PROBLEM	SOLUTION
NOT RAISING LOAD		
LOCK RELEASE BUTTON NOT ENGAGED	DEPRESS LOCK RELEASE BUTTON. (AN AUDIBLE ALARM WILL SOUND) THEN DEPRESS THE UP BUTTON.	
LOW HYDRAULIC FLUID	LOWER UNIT COMPLETELY. DISCONNECT POWER SUPPLY. OPEN CONSOLE. VERIFY PROPER FLUID LEVEL AT SIGHT GLASS ON RESERVOIR.	
PRESSURE RELIEF ADJUSTMENT	REFER TO POWER UNIT SPECIFICATIONS.	
UNIT OVERLOADED	VEHICLE TO HEAVY TO BE RAISED.	
WRONG ROTATION OF MOTOR	REVERSE POWER LINES. (HAVE AN ELECTRICIAN SERVICE)	
VEHICLE NOT CENTERED ON UNIT	CENTER VEHICLE ON UNIT SO THAT BOTH CONSOLE PRESSURE GAUGES ARE EVEN.	
LOW VOLTAGE	HAVE AN ELECTRICIAN SERVICE.	
NOT LOWERING		
LOCKS ENGAGED	DEPRESS LOCK RELEASE BUTTON. (AN AUDIBLE ALARM WILL SOUND) THEN DEPRESS THE UP BUTTON. RAISE UNIT APPROX. 5 INCHES. THEN WILE STILL DEPRESS THE LOCK RELEASE BUTTON. DEPRESS THE LOWERING BUTTON.	
OBSTRUCTION UNDER UNIT OR VEHICLE	REMOVE OBSTRUCTION.	
FORE / AFT END NOT LOWERING	RAISE LOW END TO EVEN UNIT BEFORE LOWERING. USE THE FORE / AFT BUTTONS.	
RAISING OR LOWERING QUESTIONS (IN AUTO POSITION)		
RAISING: UNIT STOPS THEN ONE END RAISES, UNIT BEGINS TO RAISE NORMALLY.	UNIT IS AUTO-LEVELING. IF THE FORE / AFT END OF THE UNIT IS LOW DURING RAISING THE UNIT WILL STOP, RAISE THE LOW END TO EVEN THE UNIT, THEN BEGAN TO RAISE NORMALLY.	
LOWERING : UNIT STOPS LOWERING, THEN ONE END RAISES, UNIT BEGINS TO LOWER NORMALLY.	UNIT IS AUTO-LEVELING. IF THE FORE / AFT END OF THE UNIT IS LOW DURING LOWERING THE UNIT WILL STOP, RAISE THE LOW END TO EVEN THE UNIT, THEN BEGAN TO LOWER NORMALLY.	
UNIT CONSTANTLY MAKING AUTO ADJUSTMENTS.	CENTER VEHICLE ON UNIT SO THAT BOTH CONSOLE PRESSURE GAUGES ARE EVEN.	
	- OR -	
	FLUID LEVEL IN AUTO LEVELER IS EITHER TOO LOW OR TOO HIGH	
RAISING OR LOWERING QUESTIONS (IN NORMAL POSITION)		
UNIT RAISING UNEVEN	CENTER VEHICLE ON UNIT SO THAT BOTH CONSOLE PRESSURE GAUGES ARE EVEN.	
UNIT LOWERING UNEVEN	CENTER VEHICLE ON UNIT SO THAT BOTH CONSOLE PRESSURE GAUGES ARE EVEN.	

TO BE USED IN CONJUNCTION WITH ELECTRICAL SCHEMATIC

TR-SERIES ELECTRICAL RATINGS:

MOHAWK MODELS TR-33, TR-35, TR-50 & TR-75
10 HP - 3 PHASE - 60 HZ

VOLTS (VAC)	FULL LOAD AMPS	MAXIMUM CIRCUIT BREAKER	MINIMUM SUPPLY WIRE AMPACITY
208-220	40	100	55 (8 GA)
230-240	36	90	55 (8 GA)
460-480	18	50	30 (12 GA)
575	14.5	35	25 (14 GA)

1. CIRCUIT BREAKER TO BE THERMAL MAGNETIC.
2. WIRE TO BE COPPER STRANDED, TYPE THHN, 90°C.
3. DO NOT USE BELOW GARAGE FLOOR OR GRADE LEVEL.
   NE PAS UTILISER À UN NIVEAU INFÉRIEUR À CELUI DU PLANCHER DU GARAGE OU DU SOL.

CAUTION: THIS IS NOT A CONTINUOUS DUTY MOTOR (SEE RATINGS BELOW).

ATTENTION: CE N'EST PAS UN MOTEUR DE DEVOIR CONTINU. (VOIR DES ESTIMATIONS DI-DESSOUS).

MODEL	ON TIME (Max)	OFF TIME
TR-33	103 sec	497 sec
TR-35	103 sec	497 sec
TR-50	103 sec	497 sec
TR-75	103 sec	497 sec

PN #601-800-304

1. ALL ELECTRICAL EQUIPMENT AND WIRING SHALL CONFORM TO ANSI/NFPA 70, NATIONAL ELECTRICAL CODE.

2. IT SHALL BE THE RESPONSIBILITY OF THE OWNER / EMPLOYER TO PROVIDE NECESSARY LOCKOUTS / TAGOUTS OF ENERGY SOURCES IN ACCORDANCE WITH ANSI Z244.1, BEFORE ATTEMPTING REPAIRS.

3. ALL FIELD WIRING / ELECTRICAL RELATED LABOR SHALL BE PERFORMED BY CERTIFIED ELECTRICIANS.

4. UNIT MUST BE PROPERLY GROUNDED IN ACCORDANCE TO NEC ARTICLE 250 (GROUNDING), AND APPLICABLE LOCAL CODES.

5. ## DENOTE WIRE NUMBERS.

6. LABEL MARKERS SHALL BE PLACED ON ALL WIRES (BOTH ENDS), SWITCHES, RELAYS, LAMPS, ETC., ALL WIRES TO BE INSTALLED WITH TERMINAL LUGS. ALL CONNECTIONS SHALL BE WRENCH TIGHT.

7. THE FOLLOWING COLOR WIRES SHALL BE RESERVED.
   GREEN: ALL EQUIPMENT GROUNDING CONDUCTORS.
   WHITE: ALL NEUTRAL CONDUCTORS.

8. VERIFY PROPER MOTOR WIRING FOR PROPER VOLTAGE & ROTATION AT INITIAL START-UP.

9. TRANSFORMER TERMINALS TO BE WIRED AND FUSED ACCORDING TO CUSTOMER'S POWER SUPPLY. SEE TABLES ABOVE FOR FUSE SIZES, HEATER ELEMENT SIZES, & TRANSFORMER WIRING.

10. ALL FUSES TO BE CLASS CC TIME DELAY TYPE.

MODEL:
SERIAL NUMBER:
DATE OF INSTALLATION:

SERVICE CHART

DATE	PART REPLACED / SERVICED	SERVICE COMPANY	SERVICED BY

MAINTENANCE CHART

DATE	MAINTENANCE PERFORMED	SERVICE COMPANY	SERVICED BY

MOHAWK

MODELS
TR-33/ 35/ 50 /75
TR-33WT/35WT/50WT/70WT
FIGURES & DIAGRAMS

MOHAWK LIFTS, LLC.
65 VROOMAN AVENUE
AMSTERDAM, NY 12010
TOLL FREE : 1-800-833-2006
FAX : 1-518-842-1289
LOCAL : 1-518-842-1431

MODEL TR-SERIES

4–POST TRACK LIFT

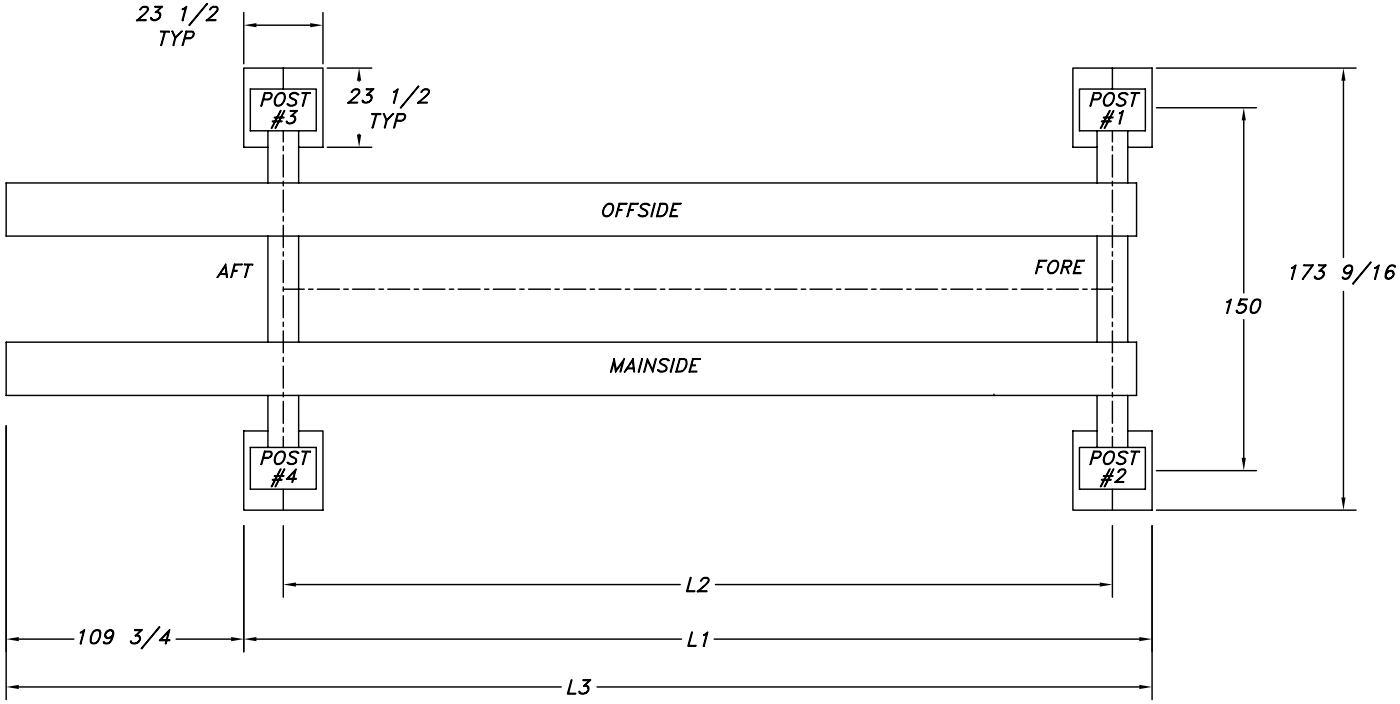

LIFT		20′ Lg Tracks	25′ Lg Tracks	30′ Lg Tracks
TR–35/50/75	L1	274.5″	334.5″	394.5″
	L2	251″	311″	371″
	L3	375 7/8″	435 7/8″	495 7/8″

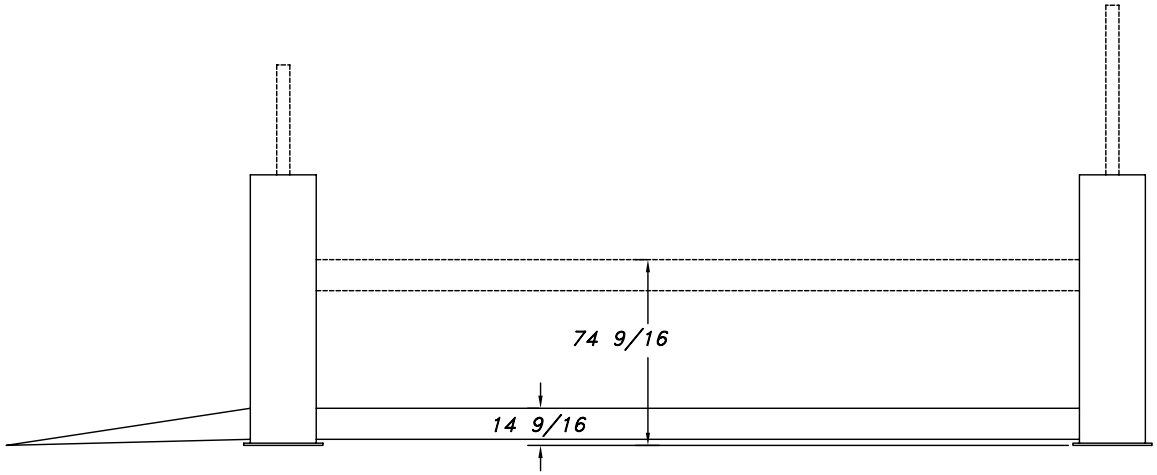

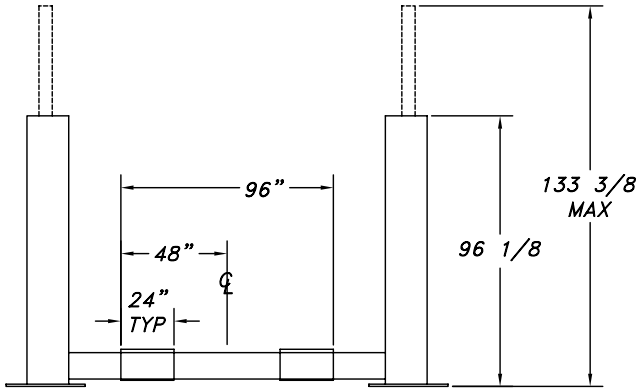

MAN1349

Diagonal Measurements Layout (TR-Series)

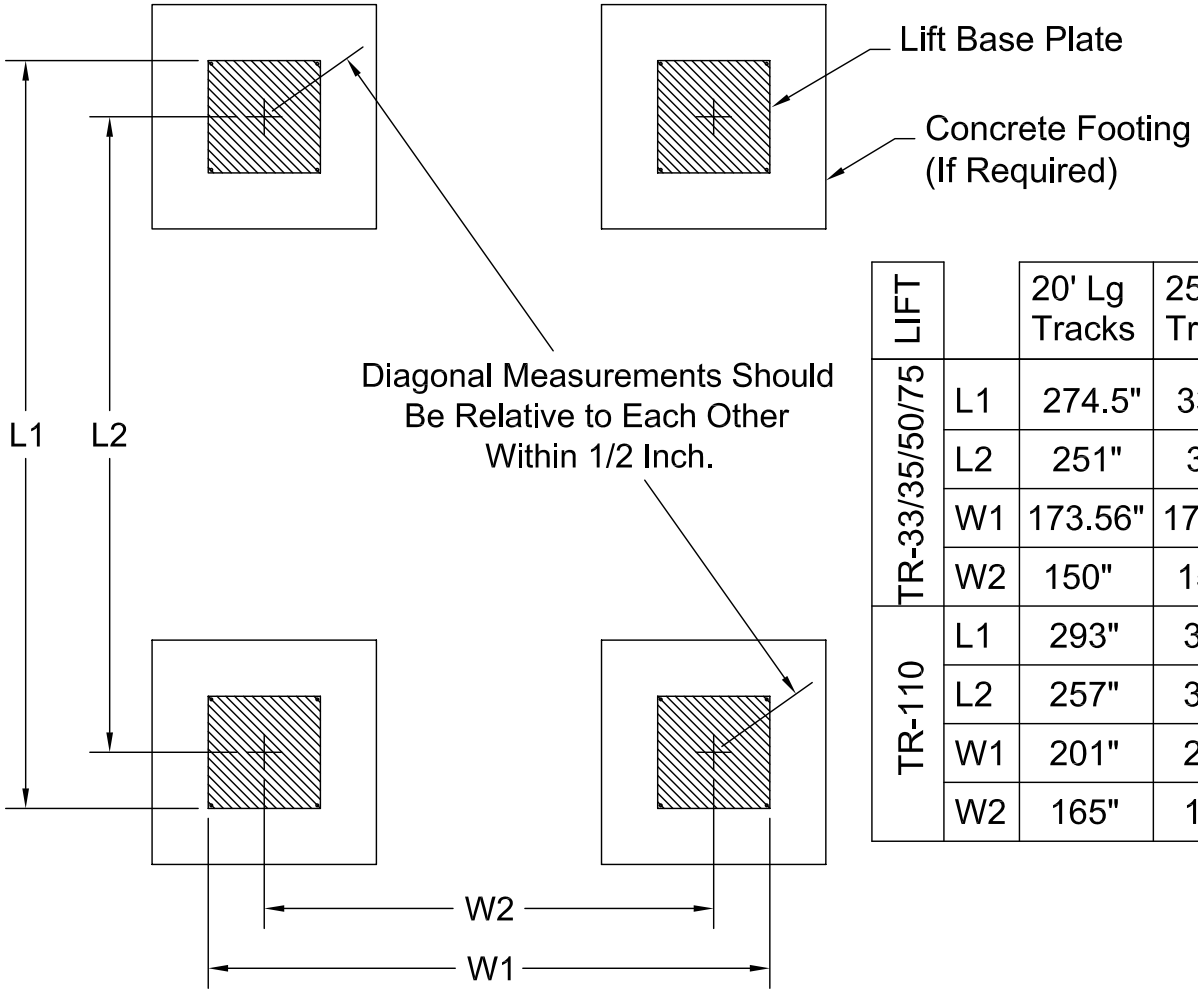

LIFT		20' Lg Tracks	25' Lg Tracks	30' Lg Tracks
TR-33/35/50/75	L1	274.5"	334.5"	394.5"
	L2	251"	311"	371"
	W1	173.56"	173.56"	173.56"
	W2	150"	150"	150"
TR-110	L1	293"	353"	413"
	L2	257"	317"	377"
	W1	201"	201"	201"
	W2	165"	165"	165"

FLOOR:
The floor should be flat and level. Concrete should be in good condition with a 4000 psi minimum strength and a five (5") inch minimum thickness. Concrete should be steel reinforced as per good commercial standard practices.

CONCRETE:
All concrete specifications must be carefully followed. Failure to do so may jeopardize life, equipment and property.

IMPORTANT:
DO NOT DRILL mounting holes until the lift has been cycled up and down and is running freely. Insure all safety latches are free and performance is proper and absolute.

FOOTINGS:
Four (4) footings 6 foot x 6 foot x 1 foot deep may be used if pre-existing concrete is of insufficient or questionable strength. These footings must be surrounded by a typical slab of structurally sound concrete with a minimum thickness of four (4") inches. These footings should be tied into the surrounding slab with steel reinforcement.

FILE: MAN1345.DWG

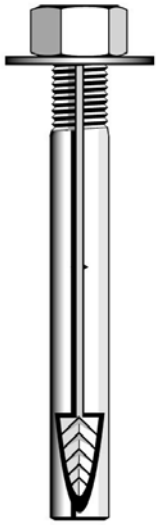

The Original wej-it® Wedge Anchors

Key Features/Benefits

- **Time-Tested, Pr ven Reliability.** An industry standard for over 45 years.
- **Fully Assembled and Ready to Use.** Unparalleled job-site convenience.
- **BOLT SIZE IS HOLE SIZE.®** Allows precision placement of equipment through pre-drilled holes.
- **Exclusive "Positive Wedge Connections."** Minimizes wedge loosening due to vibratory loads.

USA ENGINEERED & MANUFACTURED

Specifications, Approvals and Listings

Type	
Zinc Plating	ASTM B-633, Type III, SCI
ICBO-ES	Report #1821
City of Los Angeles	#RR 24939
DOT	Please call Customer Service for specific information by state.
Federal Specifications	QQZ-325C, Type II, Class 3 (Clear Chromate added) FFS-325, Group II, Type 4, Class 1

Maximum Tensile and Shear Capacity for Static Loads

	Limestone Aggregate			Unreinforced Stone Aggregate oncrete Zin Plated arbon Steel							Unreinforced Lightweight (Idealite)		
Anchor & Hole Size	Embed-ment (in)	2000 psi Tension (lbs)	2000 psi Shear (lbs)	Embed-ment (in)	3000 psi Tension (lbs)	3000 psi Shear (lbs)	5000 psi Tension (lbs)	5000 psi Shear (lbs)	7000 psi Tension (lbs)	7000 psi Shear (lbs)	Embed-ment (in)	5000 psi Tension (lbs)	5000 psi Shear (lbs)
3/4	•	•	•	3	11579	15537	19299	21000	27019	23103	3 1/2	17293	19050
3/4	•	•	•	7	15444	15537	25740	21000	36036	23103	•	•	•
1	•	•	•	5 1/2	16351	•	27252	33083	38153	35700	4 1/2	21616	31666
1	•	•	•	7	17837	•	29728	33083	41619	35700	•	•	•
Source	1			2							2		

Sources (available upon request): 1) University of Texas, Austin, TX (using new ICBO-ES testing criteria); 1993. 2) AA Engineers & Associates, Inc., Denver, O; 1981.

Length Selection Guide

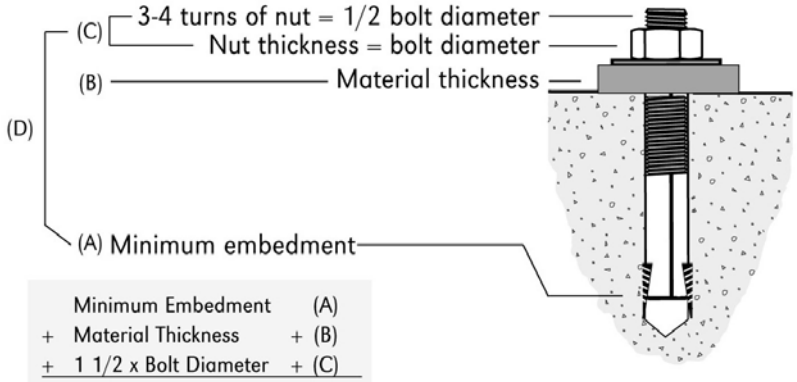

	Minimum Embedment	(A)
+	Material Thickness	+ (B)
+	1 1/2 x Bolt Diameter	+ (C)
=	Total Anchor Length	= (D)

The Original Wej-it™ Since 1952

Edge Distance and Spacing Requirements

Embedment (E) in Anchor Diameters (d)	Spacing	Edge Distance
E < 6d (shallow)	3.50E	1.75E
6d ≤ E ≤ 8d (standard)	2.00E	1.00E
8d < E (deep)	1.50E	0.75E

Notes:

- Information provided only for the use of a qualified design engineer. Use of technical data by persons not qualified could cause serious damage, injury, or even death.
- Ultimate values shown. For static loads, use one-fourth of the maximum tensile and shear capacities for the recommended 4:1 safety factor.

INSTALLATION INSTRUCTIONS – MOHAWK LIFTS

1. Drill the hole perpendicular to the work surface.* The drill bit diameter will be the same as the anchor diameter that you are installing. To assure full holding power, do not ream the hole or allow the drill to wobble. Ensure all holes are a minimum of 6 inches away from any cracks, seams or defects in the concrete.

2. Drill the hole 1 diameter deeper than the intended embedment of the anchor, but not closer than two diameters to the bottom (opposite) surface of the concrete.

3. Clean the hole using compressed air and a nylon brush. A clean hole is necessary for proper performance.

4. For ease of installation, make certain that the spear heads are located up against the wedge pockets.

5. Turn the nut onto the anchor until contact is made with the top of the spears and the bottom of the washer. Insert anchor into hole.

6. Tap anchor into hole with a 2 ½ lb. hammer until the washer rests solidly against the base plate.

7. Tighten the nut from 1 ½ to 3 turns past hand tight position to estimated installation torque below. Use of an Impact wrench for Installation of the anchor is NOT recommended.

TORQUE VALUES

Anchor Diameter (in)	Drill Bit Diameter (in)	Estimated Install Torque (ft-lb)
3/4	3/4	75
1	1	130

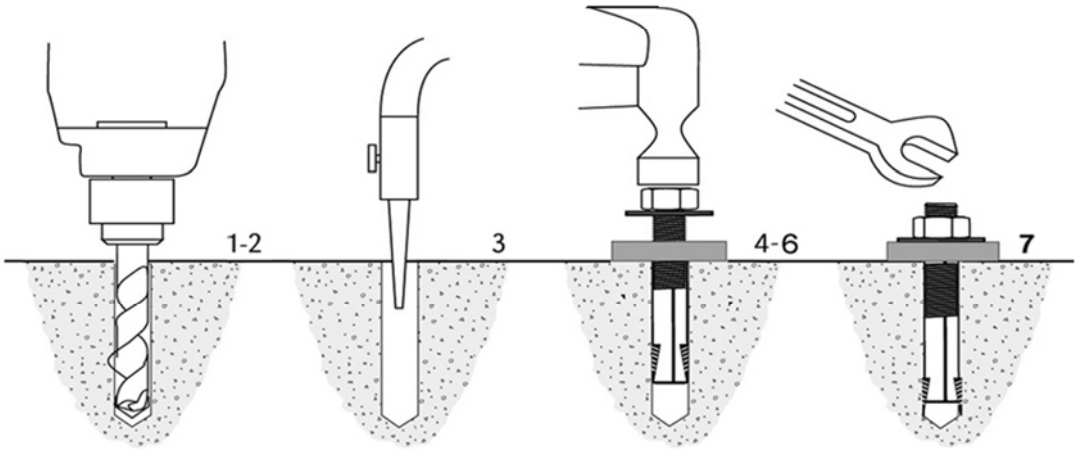

INSPECTION & MAINTENANCE INSTRUCTIONS

1. Verify torque on anchors to 70 ft-lbs for 3/4 anchors and 120 ft-lbs for 1" anchors for future/annual inspections.

* Always wear safety glasses. Follow the drill manufacturer's safety instructions. Use only solid carbide-tipped drill bits meeting ANSI B212.15 diameter standards as listed on back cover.

REV: 11/07

POST SHIMMING

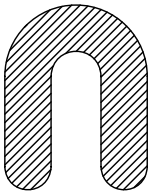

1/4" Thick
(Black)

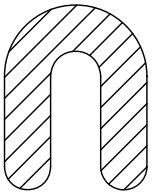

1/8" Thick
(Red)

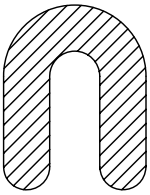

1/16" Thick
(Blue)

All post shims are designed to be underneath the base plates and around the anchor bolts.

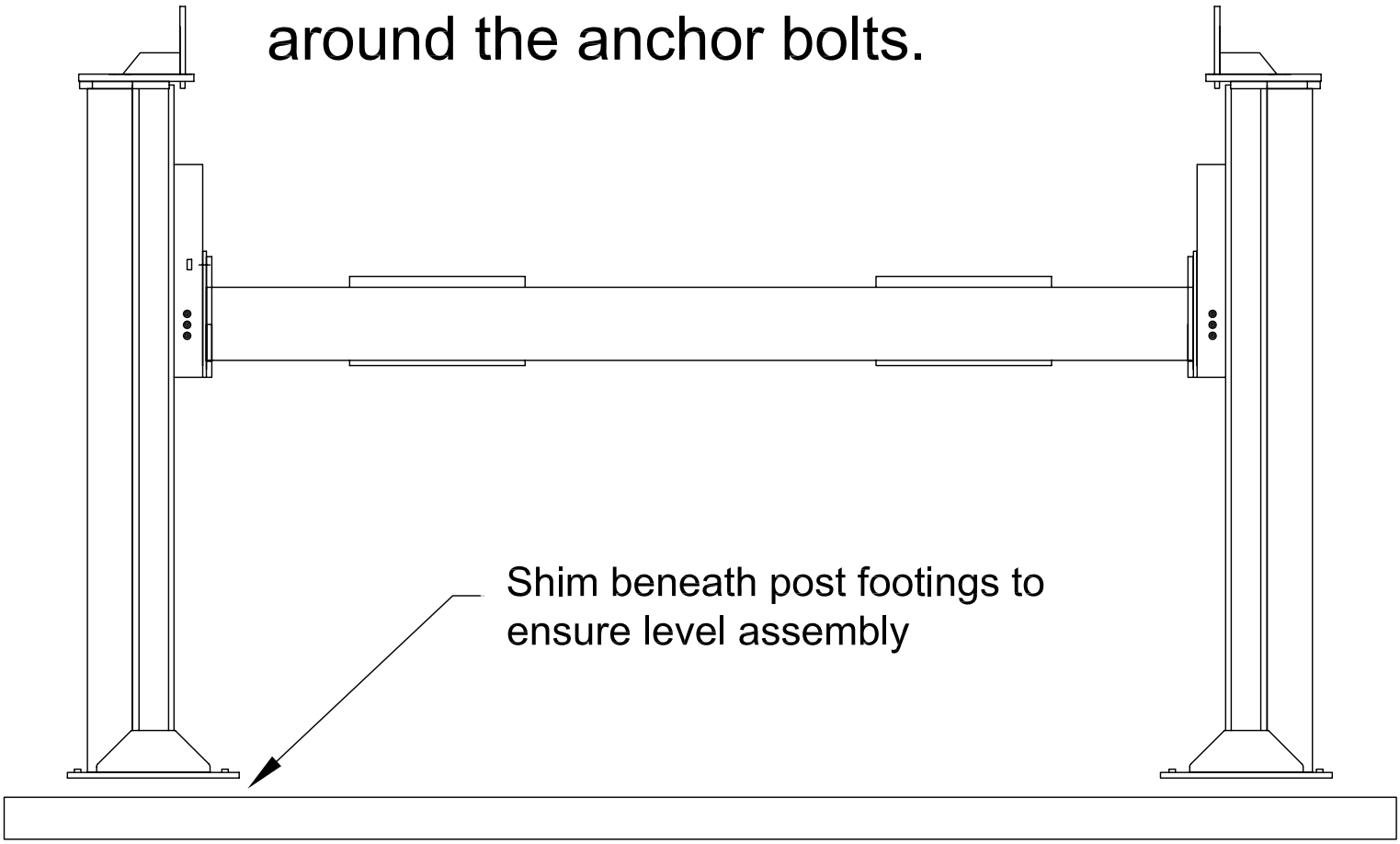

MAN1346

TR–SERIES
FLOOR SLOPE & SHIMMING GUIDELINES

IMPORTANT NOTICE:

THIS LIFT WILL ONLY LIFT AS LEVEL AS THE FLOOR IT IS LOCATED ON. SHIMMING AND/OR FLOOR MODIFICATIONS MAY BE REQUIRED TO LEVEL LIFT. SINCE EVERY OWNER'S SHOP FLOOR IS DIFFERENT, REVIEW THE FOLLOWING GUIDELINES TO PROPERLY LEVEL THIS LIFT.

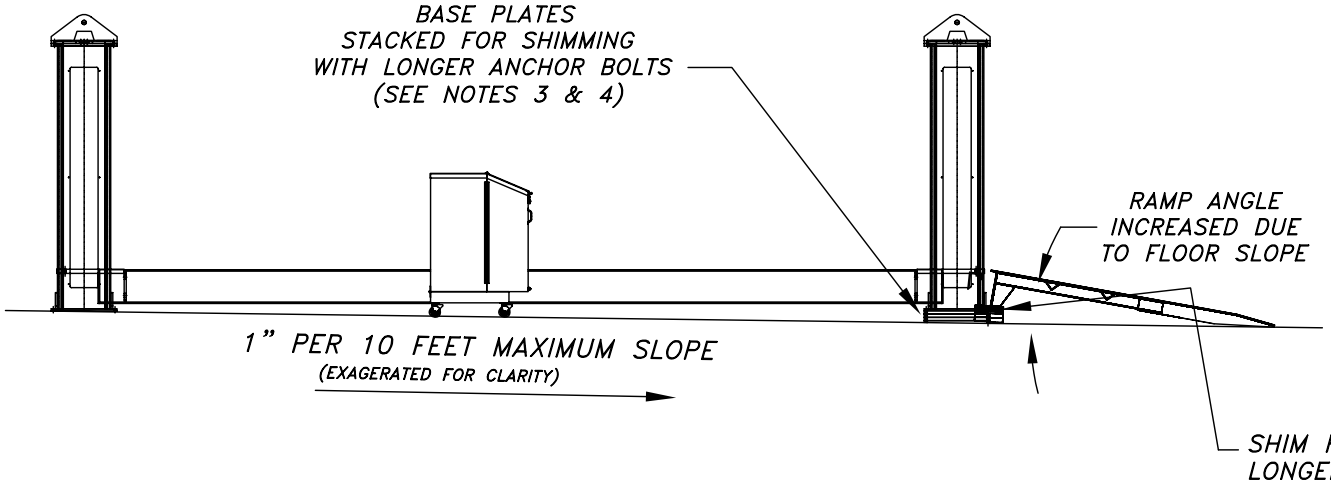

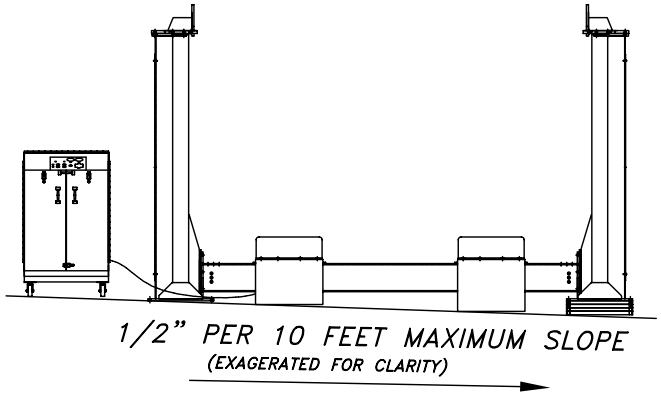

RECOMMENDED GUIDELINES:

1. MAXIMUM LENGTHWISE SLOPE IS 1" PER 10'. MAXIMUM WIDTHWISE SLOPE IS 1/2" PER 10'. FOR SLOPES GREATER THAN THIS, IT IS RECOMMENDED TO POUR A NEW SLAB FOR THIS LIFT.

2. FOR SHIMMING IN EXCESS OF 2", IT IS RECOMMENDED TO POUR NEW SLABS FOR POSTS. ENSURE THAT THE SURFACE OF THESE SLABS ARE LEVEL WITH RESPECT TO EACH OTHER.

3. USE 1/2" BASE PLATES FOR SHIMMING OF 1/2" OR GREATER UNDER POSTS. STACK BASE PLATES AS NEEDED. (CONTACT MOHAWK FOR EXTRA BASE PLATES FOR SHIMMING)

4. FOR SHIMMING IN EXCESS OF 1/2", LONGER WEJ–IT ANCHORS ARE REQUIRED. (CONTACT MOHAWK FOR LONGER ANCHORS PER YOUR SPECIFIC SHIMMING SITUATION)

5. FOR SHIMMING LESS THAN 1/2", USE PLASTIC SHIMS UNDER LOWEST BASE PLATE.

6. NOTICE THAT SHIMMING THE APPROACH (RAMP) END OF THE LIFT WILL INCREASE THE RAMP ANGLE SLIGHTLY.

REV: 12/99
FILE: MAN1341
REV: A 8/08

TRACK LEVELER FUNCTIONS

SYSTEM IS LEVEL

AFT LEVEL INDICATOR LIGHT

OFF

FORE LEVEL INDICATOR LIGHT

OFF

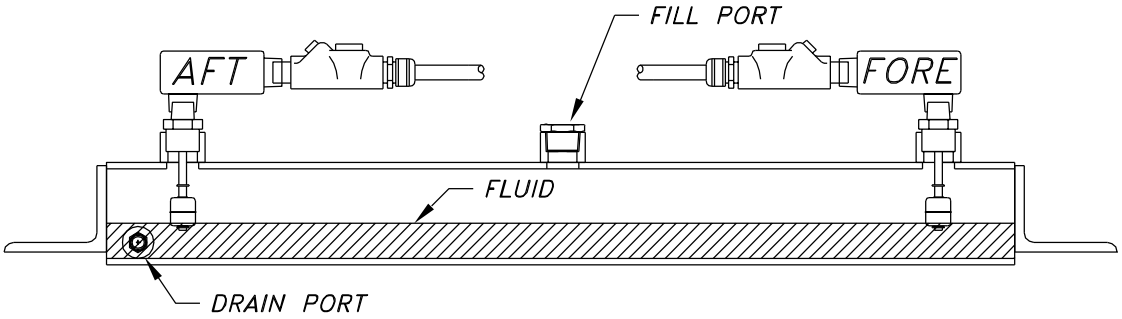

FORE END OF LIFT IS LOW

AFT LEVEL INDICATOR LIGHT

OFF

FORE LEVEL INDICATOR LIGHT

ON

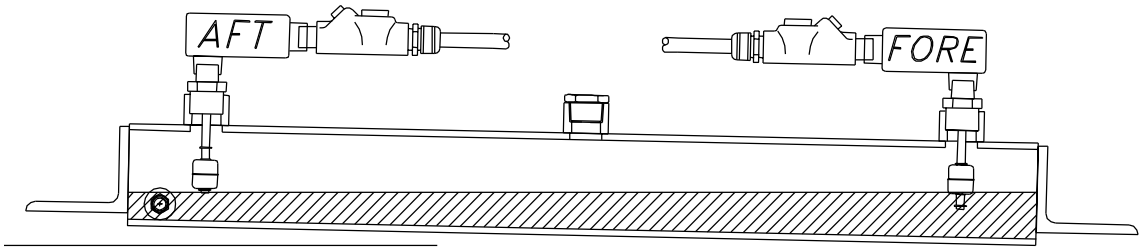

AFT END OF LIFT IS LOW

AFT LEVEL INDICATOR LIGHT

ON

FORE LEVEL INDICATOR LIGHT

OFF

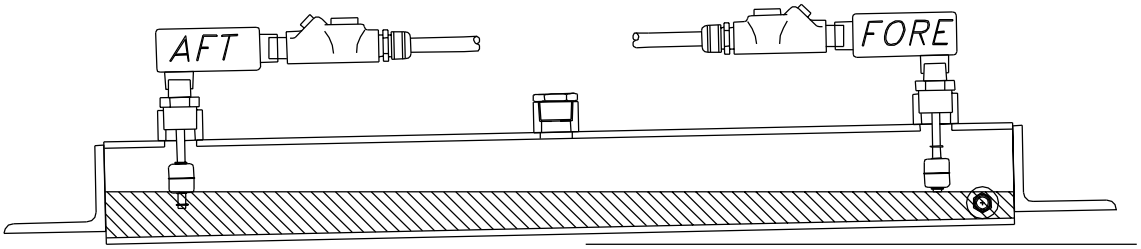

USE ANTI-FREEZE AS FLUID REPLACEMENT ONLY !!

WHEEL CHOCK PLACEMENT

WHEEL
CHOCK

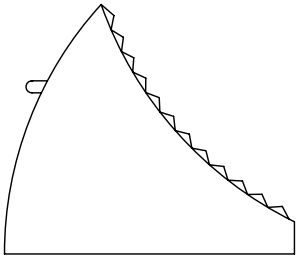

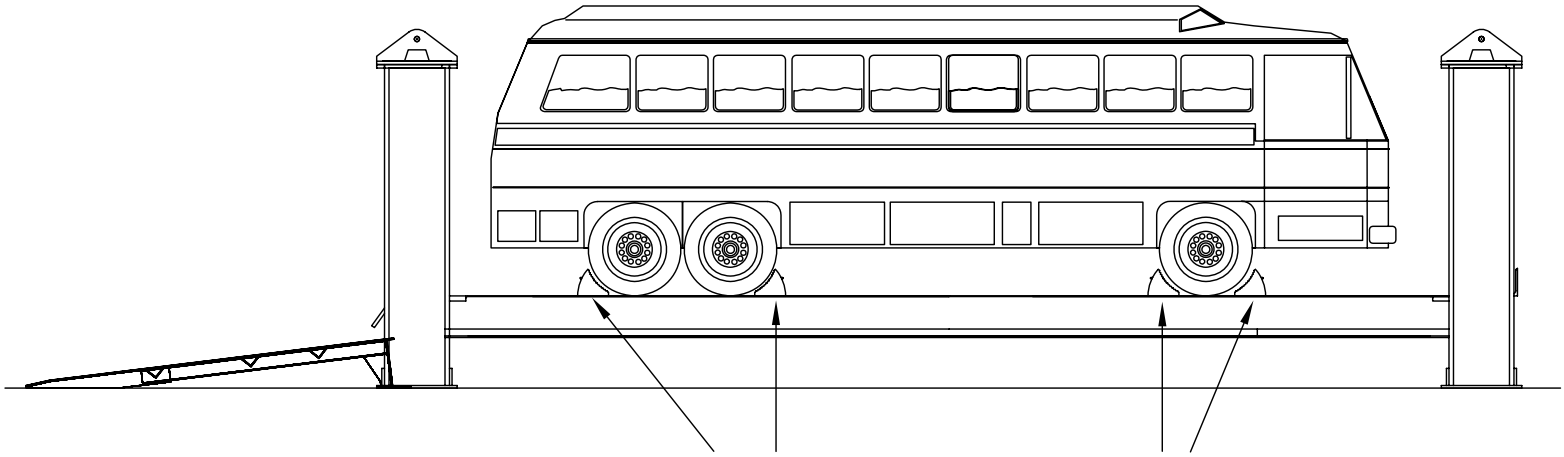

WHEEL CHOCK LOCATIONS

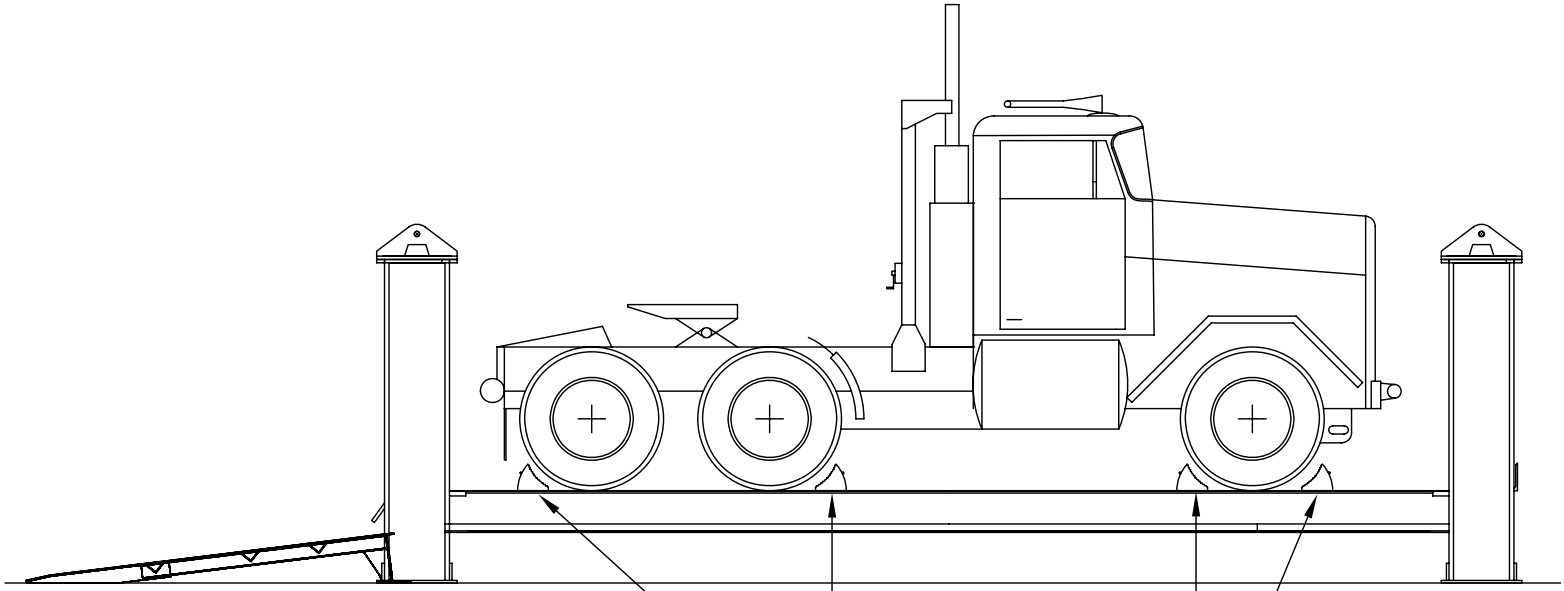

WHEEL CHOCK LOCATIONS

MAN1347
REV: A 8/08

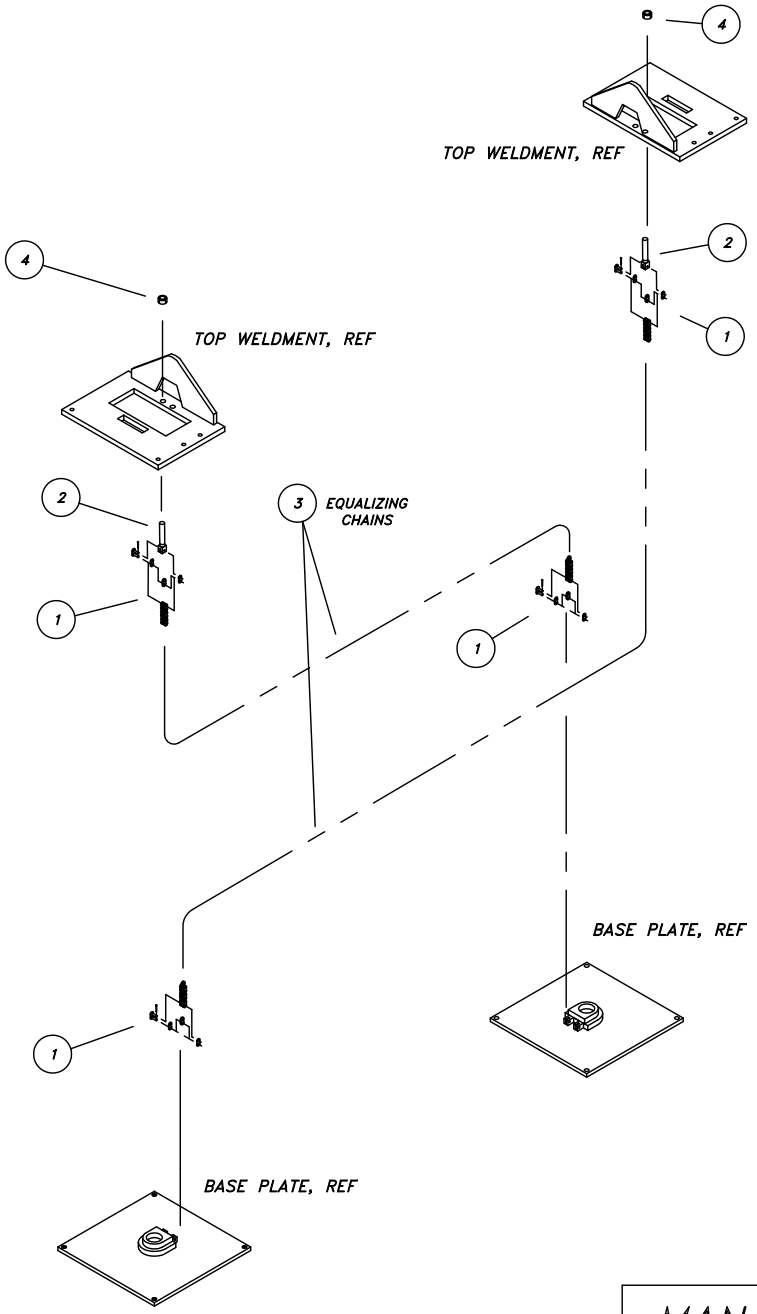

MAN1352

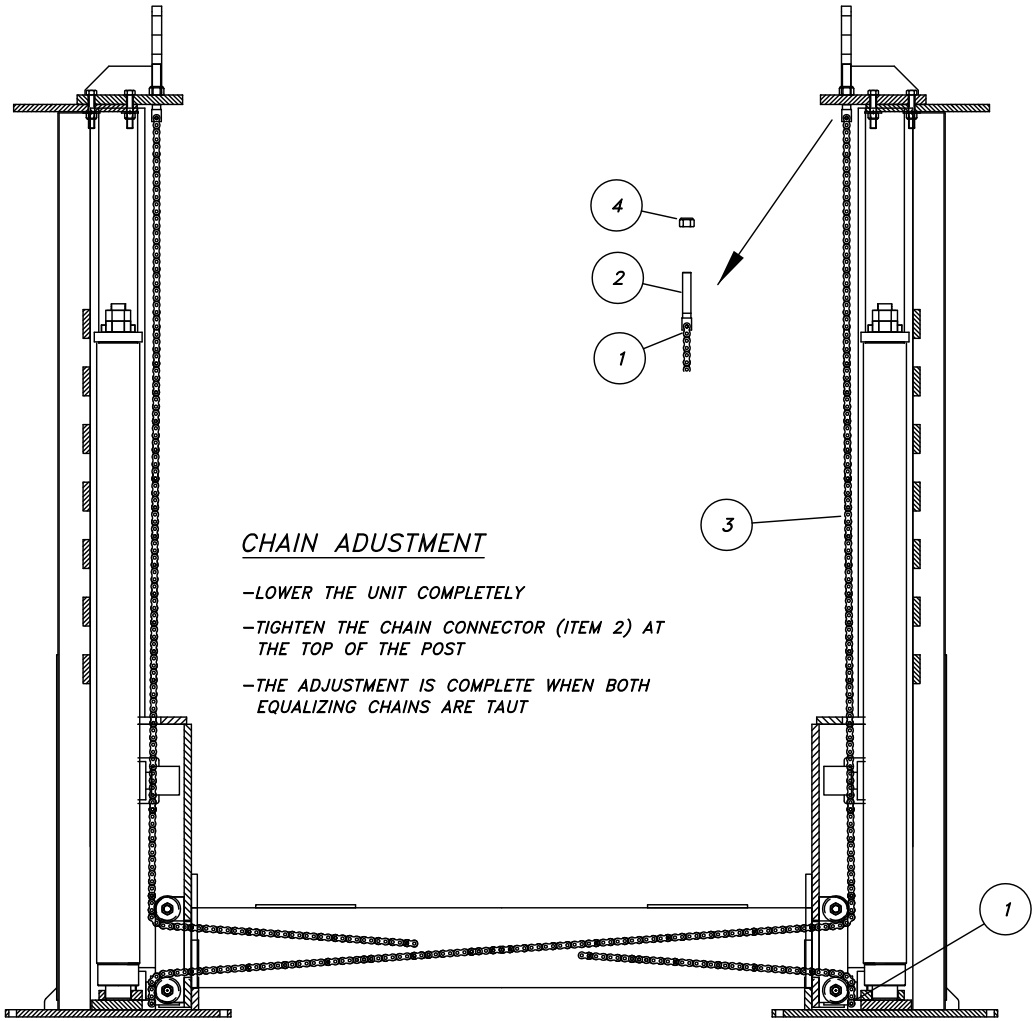

CHAIN ADUSTMENT

- LOWER THE UNIT COMPLETELY
- TIGHTEN THE CHAIN CONNECTOR (ITEM 2) AT THE TOP OF THE POST
- THE ADJUSTMENT IS COMPLETE WHEN BOTH EQUALIZING CHAINS ARE TAUT

QUANTITY SHOWN IS THE SAME FOR 'FORE & 'AFT' LEG ASSEMBLIES

ITEM	PART NUMBER	DESCRIPTION	QTY
4	600-690-010	NUT, LOCK, 7/8-14 NF	2
3	600-830-005	CHAIN, BL646, 225" (300 PITCHES)	2
2	025-000-107	CHAIN CONNECTER	2
1	600-830-026	MASTER CHAIN LINK ASSEMBLY	4

TR-SERIES CHAIN ROUTING

FILE: MAN1352
DATE: 6/2011

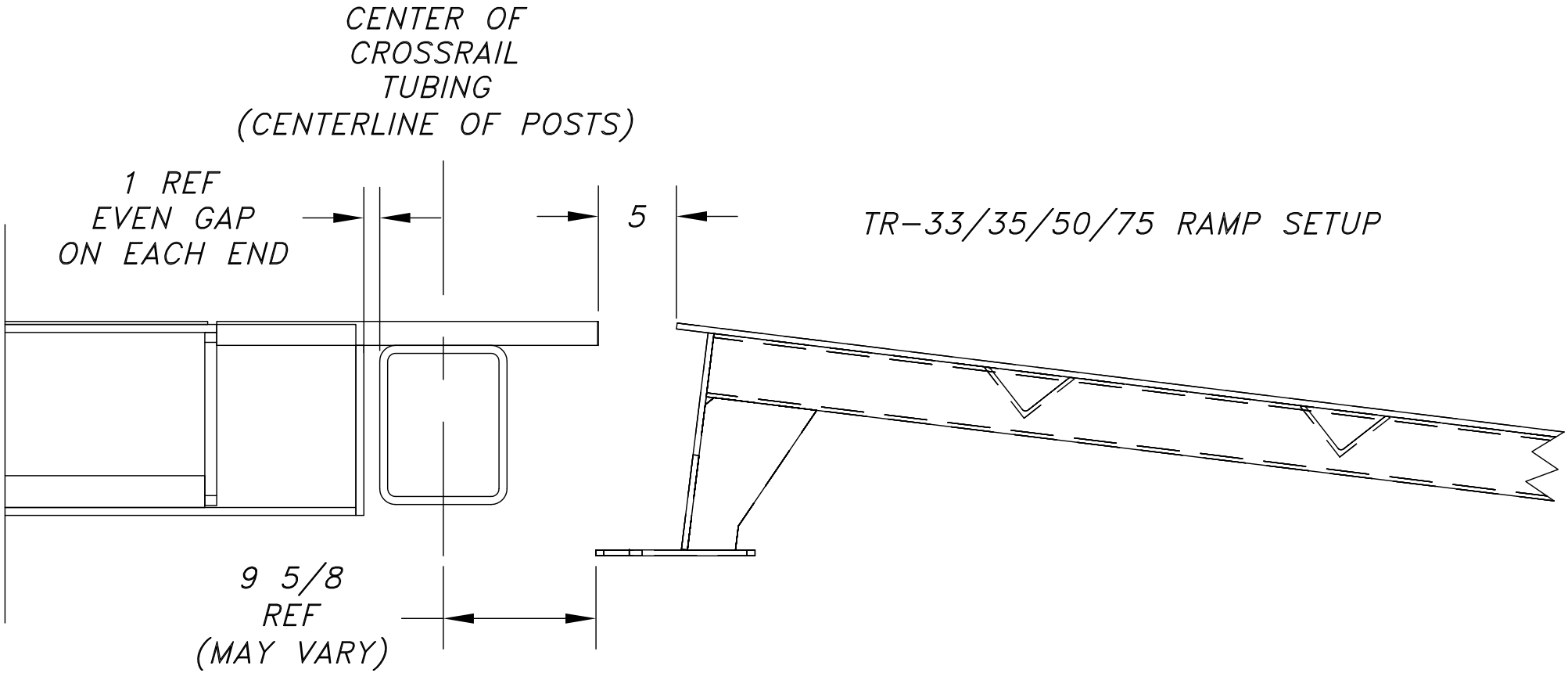
CENTER OF
CROSSRAIL
TUBING
(CENTERLINE OF POSTS)
1 REF
EVEN GAP
ON EACH END
5
TR-33/35/50/75 RAMP SETUP
9 5/8
REF
(MAY VARY)

MOHAWK

MODELS
TR-33/ 35/ 50/ 75
TR-33WT/35WT/50WT/ 70WT
PARTS DRAWINGS

MOHAWK LIFTS, LLC.
65 VROOMAN AVENUE
AMSTERDAM, NY 12010
TOLL FREE : 1-800-833-2006
FAX : 1-518-842-1289
LOCAL : 1-518-842-1431

REV.	DESCRIPTION	DATE	BY	APP'D.
A	RAMP AND RAMP DETAIL ADDED	8/08	dak	

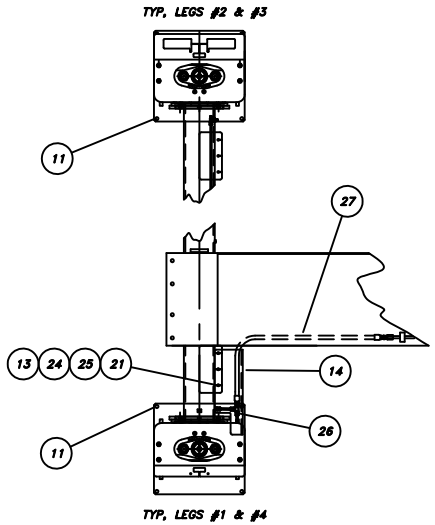

NOTE
SEE DRAWING #075-050-XXX FOR PLUMBING OF HOSES & FITTINGS ON TRACKS, CROSSRAIL, & LEG ASSEMBLIES.

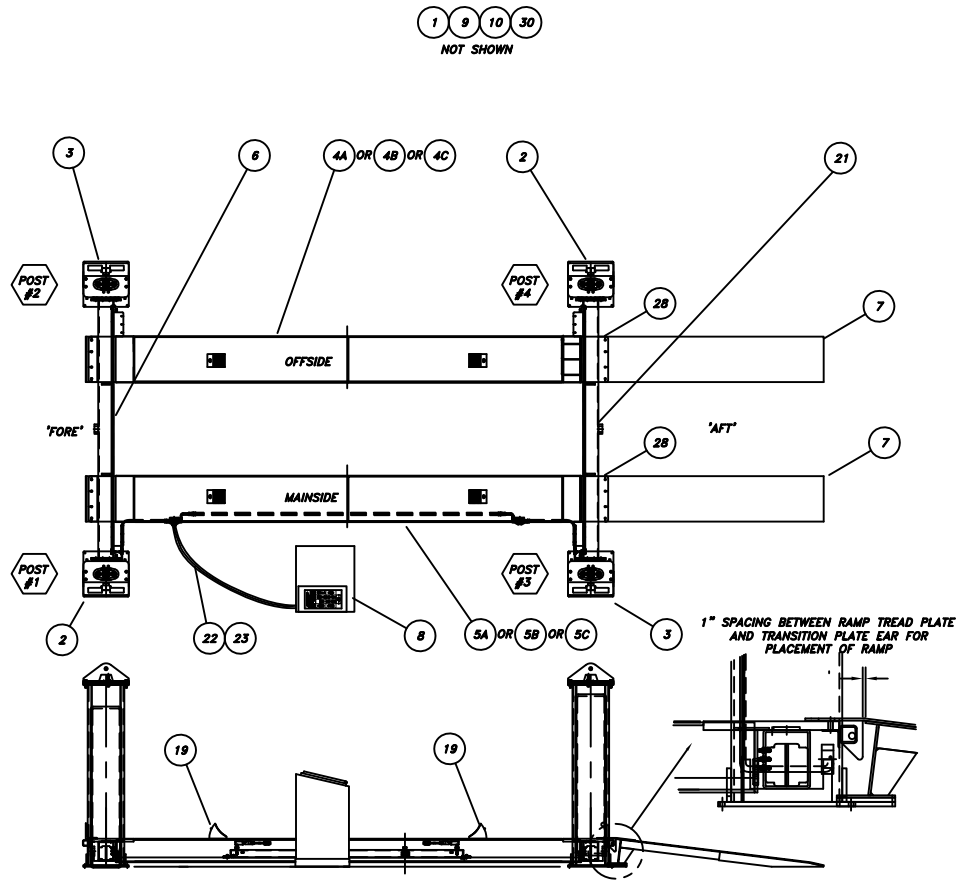

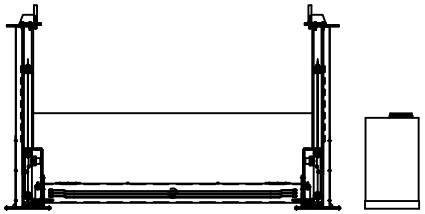

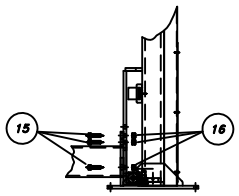

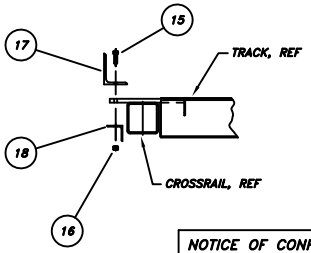

ITEM	PART NUMBER	DESCRIPTION	QTY
28	075-050-003	AUTOMATIC WHEEL STOP ASSY (2)	REF
27	050-000-059	HOSE ASSEMBLY (6)	REF
26	035-001-006	TUBING ASSEMBLY CLUSTER W/TEE (6)	REF
25	600-680-012	NUT, PLAIN, 3/8-16 NC (6)	REF
24	600-710-009	WASHER, FLAT, 3/8 (12)	REF

ITEM	PART NUMBER	DESCRIPTION	QTY
23	050-004-036	HOSE ASSEMBLY, 1/2 HOSE x 20' LG (2)	REF
22	050-004-032	HOSE ASSEMBLY, 1/4 HOSE x 20' LG (2)	REF
21	600-720-011	WASHER, LOCK, 3/8 (6)	REF
20	075-050-085	CROSSRAIL TO MAIN TRACK FITTING LIST	1
19	600-930-001	WHEEL CHOCK, RUBBER (4)	REF
18	033-000-116	TRACK STOP, BOTTOM, 3/8 x 4" x 6" x 23 1/2 (2)	REF
17	050-000-157	TRACK STOP, TOP, 1/2 x 6" x 8" x 23 1/2 (2)	REF
16	600-690-003	NUT, LOCK, NYLON, 3/4-16 NF (36)	REF
15	600-640-072	BOLT, 3/4-16 NF x 3" LG, HEX HEAD CAP (36)	REF
14	050-010-115	CROSSRAIL LINE COVER, LEFT (1)	REF
13	600-640-012	BOLT, 3/8-16 NC x 1 3/4 LG, HEX HEAD, GRD 5 (6)	REF
12	050-010-116	CROSSRAIL LINE COVER, RIGHT (1)	REF
11	600-670-002	ANCHOR BOLT, WEJ-IT, 3/4 x 5" LG (16)	REF
10	033-002-048	PARTS BOX #2 ASSEMBLY (1)	REF
9	033-020-004	PARTS BOX #1 ASSEMBLY (20 FT) (1)	REF
8	ZZ1070-A-008	CONSOLE ASSEMBLY, FUSED (1)	REF
7	075-050-004	RAMP ASSEMBLY, 8' (2)	REF
6	050-010-008	CROSSRAIL ASSEMBLY (2)	REF
5C	075-010-005	TRACK ASSEMBLY, 30' LG (1)	REF
5B	050-010-003	TRACK ASSEMBLY, 25' LG (1)	REF
5A	050-020-005	TRACK ASSEMBLY, 20' LG (1)	REF
4C	050-011-013	TRACK WELDMENT, 30' LG (1)	REF
4B	050-011-012	TRACK WELDMENT, 25' LG (1)	REF
4A	050-011-011	TRACK WELDMENT, 20' LG (1)	REF
3	ZZ1070-A-004	LEG ASSEMBLY (#2 & #3) (2)	REF
2	ZZ1070-A-005	LEG ASSEMBLY (#1 & #4) (2)	REF
1	075-050-###	INSTALLATION ILLUSTRATION, TR-SERIES	1

NOTICE OF CONFIDENTIAL INFORMATION

INFORMATION CONTAINED HEREIN IS CONFIDENTIAL AND PROPERTY OF MOHAWK RESOURCES LTD., WHEN DRAWING IS FURNISHED TO OTHERS IT SHALL BE USED SOLELY FOR PURPOSES OF INSPECTION, INSTALLATION, OR MAINTENANCE. THE INFORMATION SHALL NOT BE USED OR DISCLOSED BY THE RECIPIENT FOR ANY OTHER PURPOSES WHATSOEVER.

NOTES:
1. REMOVE ALL SHARP CORNERS & EDGES.
2. UNLESS OTHERWISE SPECIFIED, SURFACE FINISH TO BE 125 RMS.
3. WELDING MEDIUM SHALL CONFORM TO AWS SPECIFICATIONS TO E-70XX ELECTRODES OR E-70T1 CODE 5.3 FLUX CORE WIRE ONLY.

TOLERANCES:
ANGULAR ± 1°
DECIMAL ± .030
FRACTIONAL ± 1/32
0.XX ± .030
0.XXX ± .005

FILE NAME MAN1452

075-050-

NEXT ASSEMBLY

SCALE 1/32	DRAWN RV	MOHAWK RESOURCES LTD.	
CHECKED	APPROVED	TITLE TR-SERIES FINAL ASS'Y, INSTALLATION	
DATE 10/07	WEIGHT N/A LB.	FROM	DRAWING NUMBER MAN1452 A

D-SIZE

REV.	DESCRIPTION	DATE	BY	APP'D.
A	OVERALL LENGTHS & RAMP LENGTHS REVISED	8/08	dak	

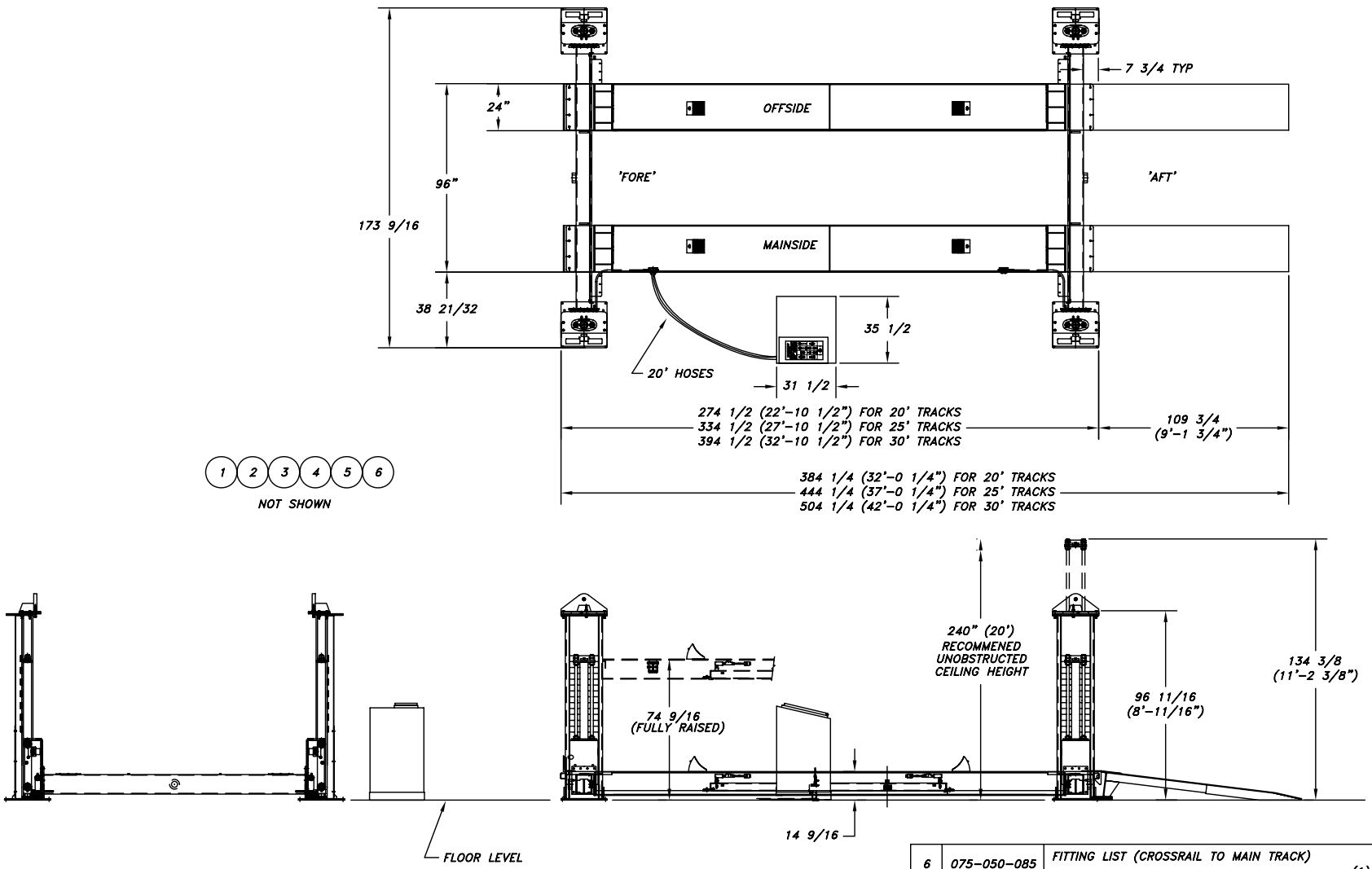

ITEM	PART NUMBER	DESCRIPTION	QTY
6	075-050-085	FITTING LIST (CROSSRAIL TO MAIN TRACK) (1)	REF
5	075-050-###	TAG & DECAL LOCATIONS (1)	REF
4	075-050-094	ENCLOSURE WIRING (1)	REF
3	075-050-091	PANEL WIRING (1)	REF
2	075-050-093	ELECTRICAL SCHEM, TR-SERIES (1)	REF
1	075-050-080	HYDRAULIC SCHEMATIC, TR-SERIES (1)	REF

NOTICE OF CONFIDENTIAL INFORMATION

INFORMATION CONTAINED HEREIN IS CONFIDENTIAL AND PROPERTY OF MOHAWK RESOURCES LTD., WHERE DRAWING IS FURNISHED TO OTHERS IT SHALL BE USED SOLELY FOR PURPOSES OF INSPECTION, INSTALLATION, OR MAINTENANCE. THE INFORMATION SHALL NOT BE USED OR DISCLOSED BY THE RECIPIENT FOR ANY OTHER PURPOSES WHATSOEVER.

NOTES:
1. REMOVE ALL SHARP CORNERS & EDGES.
2. UNLESS OTHERWISE SPECIFIED, SURFACE FINISH TO BE 125 RMS.
3. WELDING MEDIUM SHALL CONFORM TO AWS SPECIFICATIONS TO E-70XX ELECTRODES OR E-70T1 CODE 5.3 FLUX CORE WIRE ONLY.

TOLERANCES:
ANGULAR ± 1°
FRACTIONAL ± .030
DECIMAL:
0.XX ± .030
0.XXX ± .005

FILE NAME MAN1453

075-050-
NEXT ASSEMBLY

SCALE 1/32 | DRAWN RV | CHECKED | APPROVED | DATE 10/07 | WEIGHT N/A LB. | FROM

MOHAWK RESOURCES LTD.

TITLE TR-SERIES INSTALLATION ILLUSTRATION

DRAWING NUMBER MAN1453 A

REV.	DESCRIPTION	DATE	BY	APP'D.
A	1. ITEM 15 WAS 075-050-023 2. ITEM 20 WAS 075-050-024	5/08	DM	
B	ITEM 3 WAS 033-002-129.	7/08	RV	

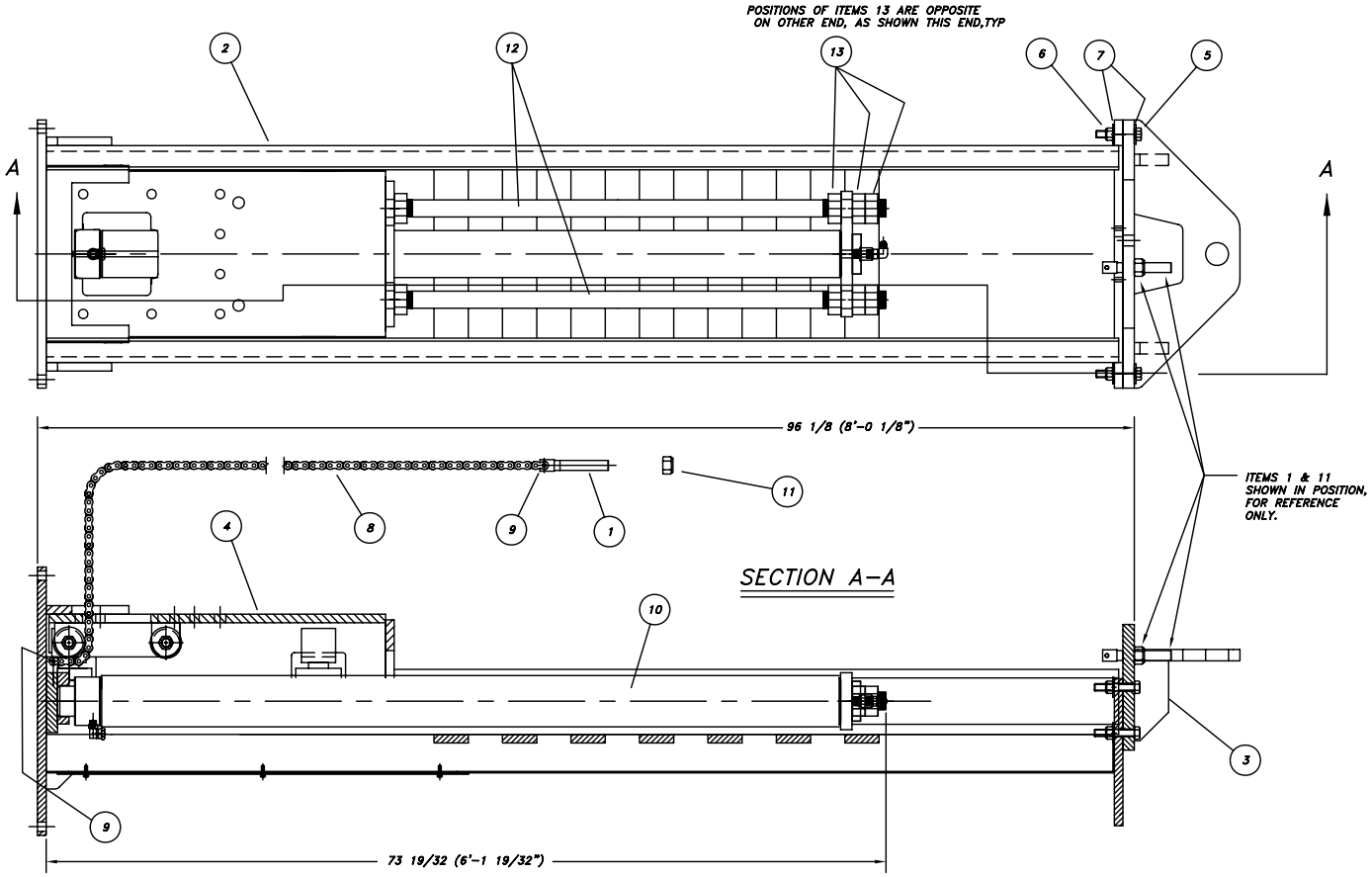

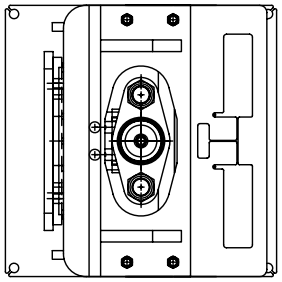

	ITEM	PART NUMBER	DESCRIPTION	QTY
	17	601-520-003	SWIVEL, 90°,ELBOW, 1/4 NPT TO 1/4 TUBE	1
	16	601-420-084	STRAIGHT, FEM, 1/4 NPT TO #6 JIC MALE	1
A1	15	075-050-062	HOSE ASSEMBLY, 13"	1
	14	075-050-022	TUBING ASSEMBLY, 65 7/8	1
	13	600-680-007	NUT, PLAIN, 1 1/2-12 NF	12
	12	050-000-145	LIFTING ROD, 1 1/2 DIA x 48" LG	2
	11	600-690-010	NUT, LOCK, 7/8-14 NF	REF
	10	ZZ1070-A-016	CYLINDER ASSEMBLY	1
	9	600-830-026	MASTER CHAIN LINK ASSEMBLY	2
	8	600-830-005	CHAIN, BL646 x 225" LG (300 PITCHES)	1
	7	600-710-007	WASHER, FLAT, 5/8	8
	6	600-690-012	NUT, LOCK, 5/8-11 NC	4
	5	600-640-049	BOLT, 5/8-11 NC x 3 1/2 LG, HX HD CAP, GRD 8	4
	4	ZZ1070-A-001	CARRIAGE ASSEMBLY (LEG #1 & #4)	1
B	3	033-002-066	CROWN WELDMENT	1
	2	033-002-018	LEG WELDMENT	1
	1	025-000-107	CHAIN CONNECTOR, 1" x 1" x 6 1/8 LG	1

SHOWING INSIDE CARRIAGE #1 & #4

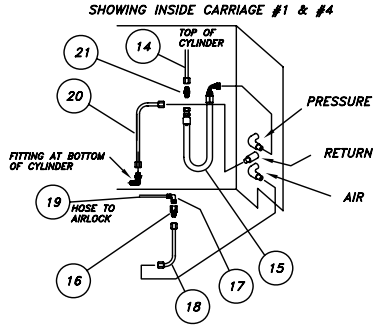

POST #1 & #4 SHOWN
(POST #2 & #3 MIRROR IMAGE OF THIS)

	ITEM	PART NUMBER	DESCRIPTION	QTY
	21	601-420-011	UNION, #6 JIC TO #6 JIC	1
A2	20	075-050-064	TUBE ASSEMBLY, 6 5/8" C.L.	1
	19	ZZ1070-P-412	TUBING, BLACK, 1/4 x 12" LG	1
	18	075-050-025	TUBING ASSEMBLY, 4 13/16	1

NOTICE OF CONFIDENTIAL INFORMATION

INFORMATION CONTAINED HEREIN IS CONFIDENTIAL AND PROPERTY OF MOHAWK RESOURCES LTD., WHERE DRAWING IS FURNISHED TO OTHERS IT SHALL BE USED SOLELY FOR PURPOSES OF INSPECTION, INSTALLATION, OR MAINTENANCE. THE INFORMATION SHALL NOT BE USED OR DISCLOSED BY THE RECIPIENT FOR ANY OTHER PURPOSES WHATSOEVER.

NOTES:
1. REMOVE ALL SHARP CORNERS & EDGES.
2. UNLESS OTHERWISE SPECIFIED, SURFACE FINISH TO BE 125 RMS.
3. WELDING MEDIUM SHALL CONFORM TO AWS SPECIFICATIONS TO E-70XX ELECTRODES OR E-70T1 CODE 5.3 FLUX CORE WIRE ONLY.

TOLERANCES:
ANGULAR ± 1°
FRACTIONAL ± .030
DECIMAL:
0.XX ± .020
0.XXX ± .005

FILE NAME ZZ1070-A-005

033-002-

NEXT ASSEMBLY

SCALE 3/16	DRAWN dak	MOHAWK RESOURCES LTD.	
CHECKED	APPROVED	TITLE LEG ASSEMBLY (POSITION #1 & #4)	
DATE 7/07	WEIGHT 1213 LB.	FROM	DRAWING NUMBER ZZ1070-A-005 B

D-SIZE

REV.	DESCRIPTION	DATE	BY	APP'D.
C	ITEM 1 WAS ZZ1070-W-002	03/13	G.GORE	

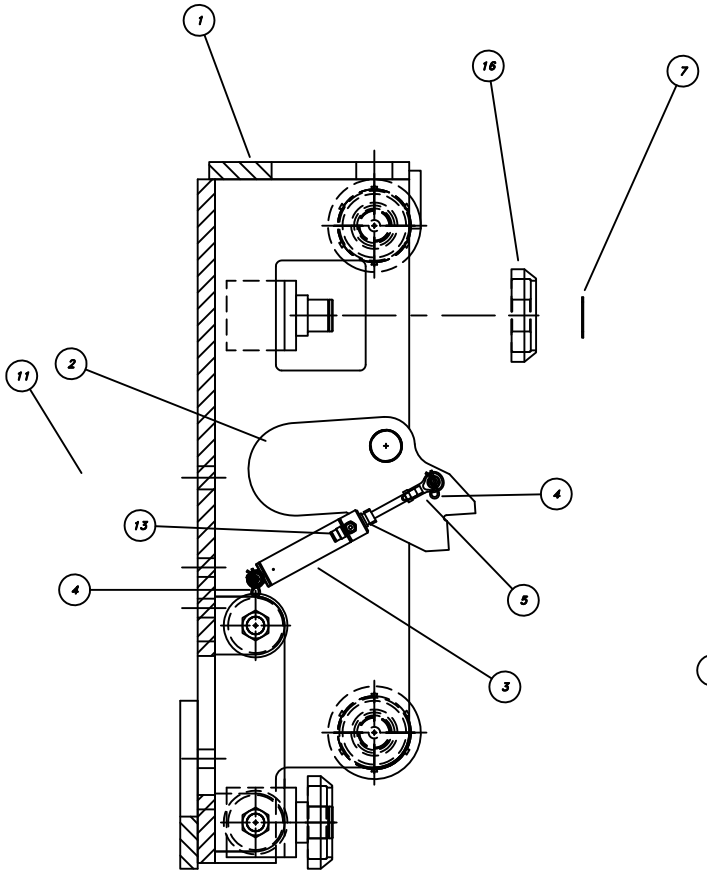

FULL SECTION

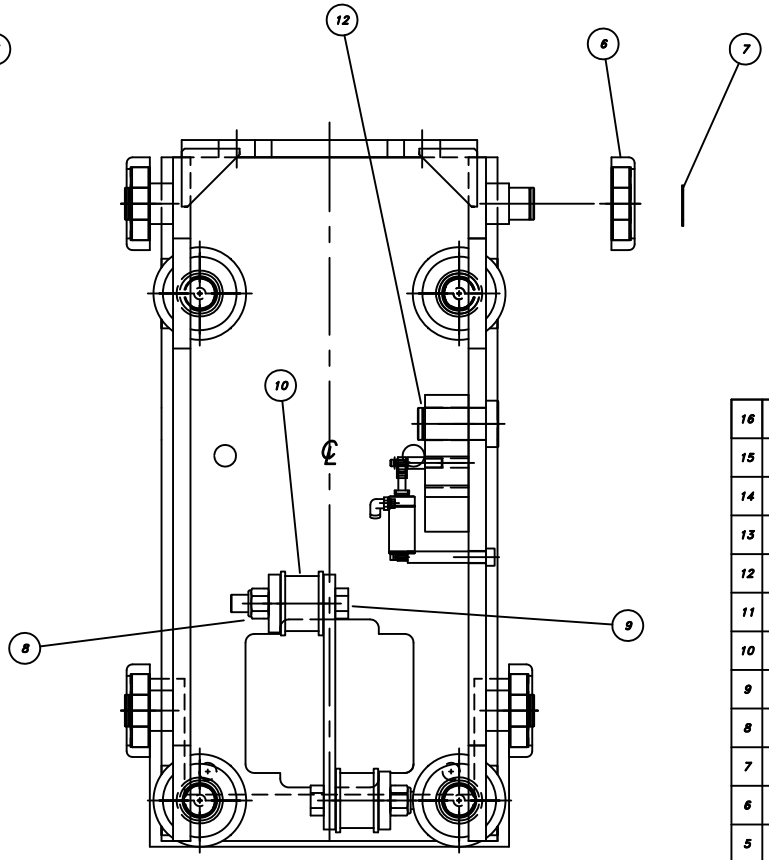

BACK VIEW

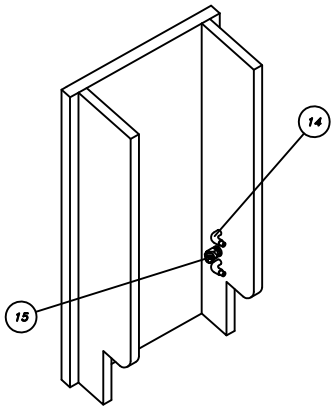

ITEM	PART NUMBER	DESCRIPTION	QTY
16	015-000-028	CARRIAGE ROLLER ASSEMBLY	4
15	601-420-203	ELBOW 45 DEG, BULKHEAD 6 JIC TO 6 JIC AEROQUIP #2042-6-6S	1
14	601-420-015	ELBOW, 90°, BULKHEAD, 6 JIC AEROQUIP #2043-6-6S	2
13	601-520-002	ELBOW, 90°, SWIVEL, 1/8 NPT TO 1/4 TUBE CAMOZZI #P6520-04-02	1
12	600-870-004	SNAP RING, #5100-150	1
11	009-001-066	SAFETY RELEASE CABLE ASSEMBLY	1
10	600-860-005	BEARING, CAM YOKE, 2 3/8 OD x 3/4 ID RBC #A-4766	2
9	600-640-027	BOLT, 3/4-16 NF x 4 1/2, GRADE 8, HEX HEAD	2
8	600-690-003	NUT, LOCK, 3/4-16 NF	2
7	600-870-001	SNAP RING, #5100-137	8
6	600-860-012	BEARING, BALL, 1 3/8 ID x 4" OD, W/ HOUSING PEER #307-SZZ-10	4
5	600-860-011	EYEBOLT (SPHERICAL BEARING) HEIM #HF5	1
4	600-890-004	HAIR SPRING COTTER PIN, .072 x 1.188 LG	2
3	601-510-006	AIR CYLINDER, 1 1/16 BORE x 1.5 STROKE PARKER #1.06RPSRS01.5	1
2	ZZ1070-W-003	LATCH BODY WELDMENT (LEG #1 & #4)	1
1	ZZ1070-W-008	CARRIAGE WELDMENT POSTS 1 & 4	1

C

NOTICE OF CONFIDENTIAL INFORMATION

INFORMATION CONTAINED HEREIN IS CONFIDENTIAL AND PROPERTY OF MOHAWK RESOURCES LTD. WHERE DRAWING IS FURNISHED TO OTHERS IT SHALL BE USED SOLELY FOR PURPOSES OF INSPECTION, INSTALLATION, OR MAINTENANCE. THE INFORMATION SHALL NOT BE USED OR DISCLOSED BY THE RECIPIENT FOR ANY OTHER PURPOSES WHATSOEVER.

NOTES:
1. REMOVE ALL SHARP CORNERS & EDGES.
2. UNLESS OTHERWISE SPECIFIED, SURFACE FINISH TO BE 125 RMS.
3. WELDING MEDIUM SHALL CONFORM TO AWS SPECIFICATIONS TO E-7018 ELECTRODES OR E-70T1 CODE 5.5 FLUX CORE WIRE ONLY.

TOLERANCES:
ANGULAR ± 1°
FRACTIONAL ± .030
DECIMAL
0.XX ± .030
0.XXX ± .005

FILE NAME ZZ1070-A-001

ZZ1070-A-

NEXT ASSEMBLY

SCALE 3/8	DRAWN dak	MOHAWK RESOURCES LTD.	
CHECKED	APPROVED	TITLE CARRIAGE ASSEMBLY (LEG #1 & #4)	
DATE 6/07	WEIGHT 230.1 LB.	FROM N/A	DRAWING NUMBER ZZ1070-A-001 C

D-SIZE

REV.	DESCRIPTION	DATE	BY	APP'D.
B	ITEM 15 WAS 601-420-040	4/13/11	G.GORE	

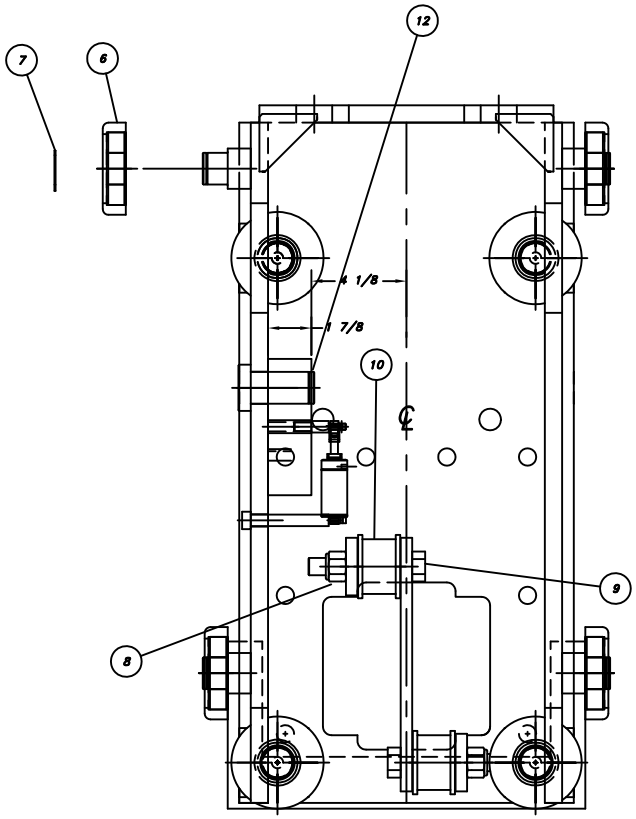

BACK VIEW

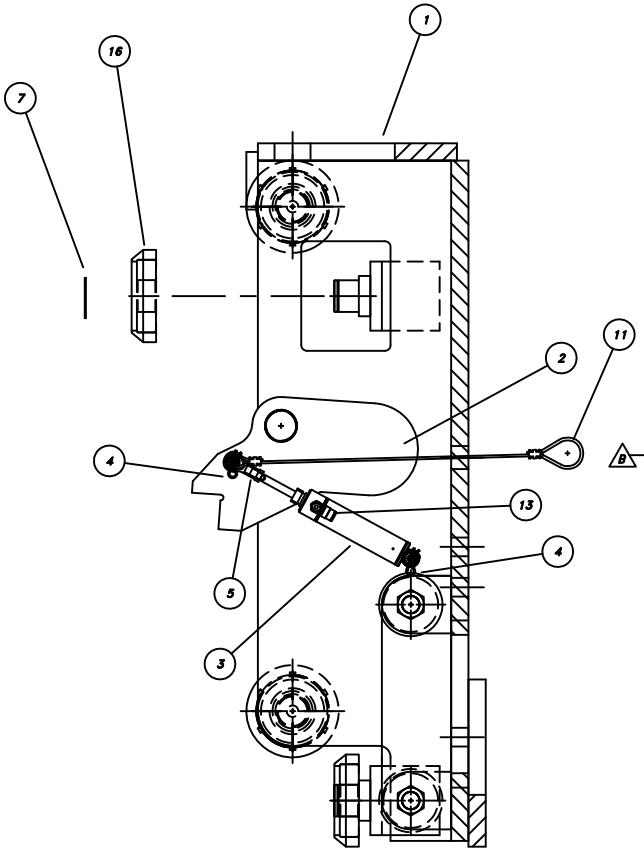

FULL SECTION

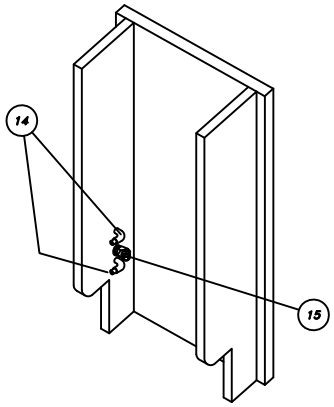

ITEM	PART NUMBER	DESCRIPTION	QTY
16	015-000-028	CARRIAGE ROLLER ASSEMBLY	4
15	601-420-203	ELBOW 45 DEG, BULKHEAD 6 JIC TO 6 JIC AEROQUIP #2042-6-6S	1
14	601-420-015	ELBOW, 90°, BULKHEAD, 6 JIC AEROQUIP #2043-6-6S	2
13	601-520-002	ELBOW, 90°, SWIVEL, 1/8 NPT TO 1/4 TUBE CAMOZZI #P6520-04-02	1
12	600-870-004	SNAP RING, #5100-150	1
11	009-001-066	SAFETY RELEASE CABLE ASSEMBLY	1
10	600-860-005	BEARING, CAM YOKE, 2 3/8 OD x 3/4 ID RBC #A-4766	2
9	600-640-027	BOLT, 3/4-16 NF x 4 1/2, GRADE 8, HEX HEAD	2
8	600-690-003	NUT, LOCK, 3/4-16 NF	2
7	600-870-001	SNAP RING, #5100-137	8
6	600-860-012	BEARING, BALL, 1 3/8 ID x 4" OD, W/ HOUSING PEER #307-SZZ-10	4
5	600-860-011	EYEBOLT (SPHERICAL BEARING) HEIM #HF5	1
4	600-890-004	HAIR PIN COTTER PIN, .072 DIA x 1.188 LG	2
3	601-510-006	AIR CYLINDER, 1 1/16 BORE x 1.5 STROKE PARKER #1.06RPSRS01.5	1
2	ZZ1070-W-004	LATCH BODY WELDMENT (LEG #2 & #3)	1
1	ZZ1070-W-002	CARRIAGE WELDMENT	1

NOTICE OF CONFIDENTIAL INFORMATION

INFORMATION CONTAINED HEREIN IS CONFIDENTIAL AND PROPERTY OF MOHAWK RESOURCES LTD. WHERE DRAWING IS FURNISHED TO OTHERS IT SHALL BE USED SOLELY FOR PURPOSES OF INSPECTION, INSTALLATION, OR MAINTENANCE. THE INFORMATION SHALL NOT BE USED OR DISCLOSED BY THE RECIPIENT FOR ANY OTHER PURPOSES WHATSOEVER.

NOTES:
1. REMOVE ALL SHARP CORNERS & EDGES.
2. UNLESS OTHERWISE SPECIFIED, SURFACE FINISH TO BE 125 RMS.
3. WELDING MEDIUM SHALL CONFORM TO AWS SPECIFICATIONS TO E-70XX ELECTRODES OR E-70T1 CODE 5.3 FLUX CORE WIRE ONLY.

TOLERANCES:
ANGULAR ± 1°
FRACTIONAL ± .030
DECIMAL
0.XX ± .030
0.XXX ± .005

FILE NAME ZZ1070-A-002

ZZ1070-A-

NEXT ASSEMBLY

SCALE 3/8	DRAWN dak	MOHAWK RESOURCES LTD.	
CHECKED	APPROVED	TITLE CARRIAGE ASSEMBLY (LEG #2 & #3)	
DATE 6/07	WEIGHT 230.1 LB.	FROM N/A	DRAWING NUMBER ZZ1070-A-002 B

D-SIZE

REV.	DESCRIPTION	DATE	BY	APP'D.
△				

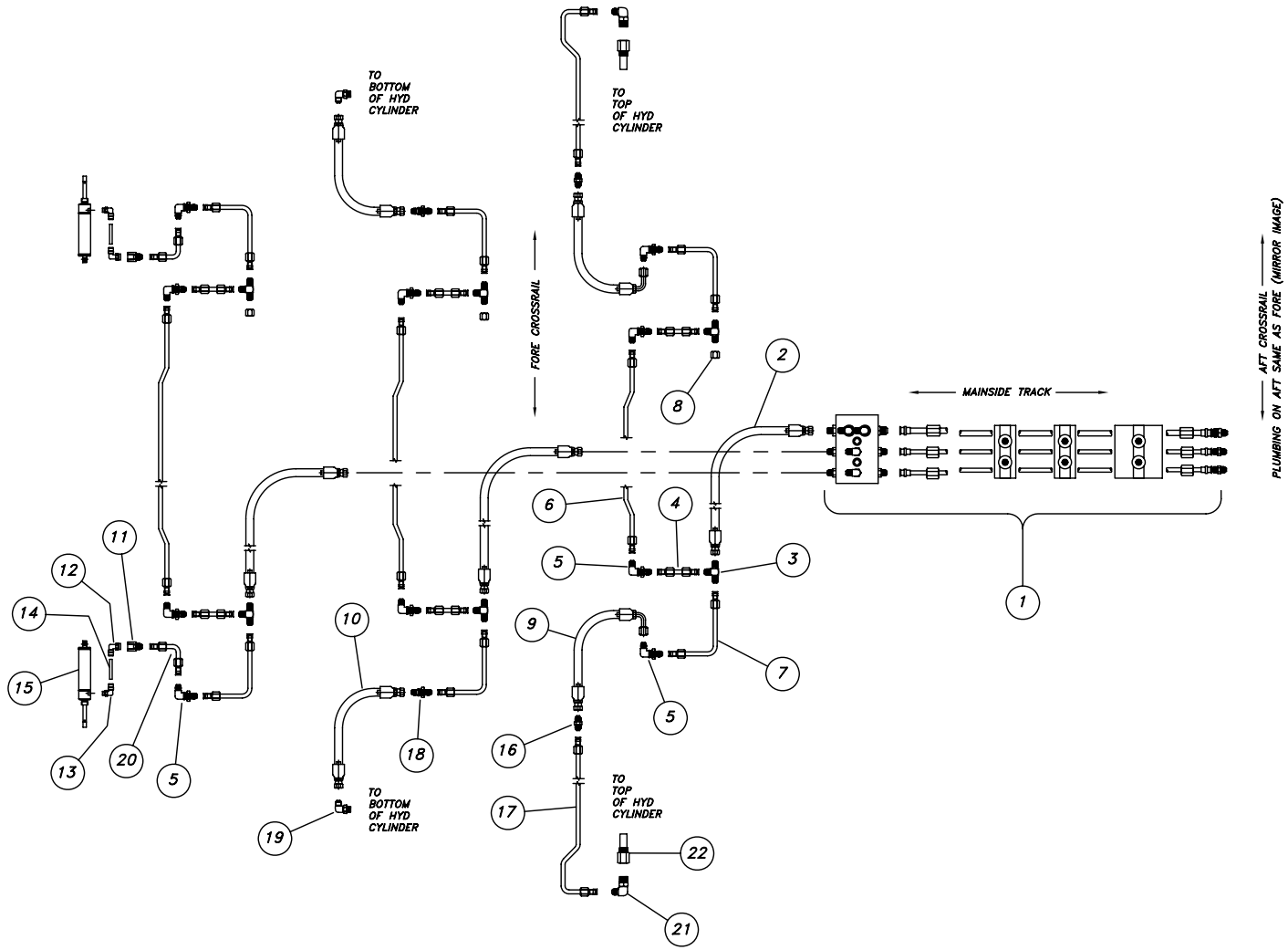

ITEM	PART NUMBER	DESCRIPTION	QTY
22	601-410-035	VELOCITY FUSE, 10 GPM, #8 ORBM TO #8 ORBF (4)	REF
21	601-420-023	ELBOW, 90°, #8 ORBM TO #6 JICM (4)	REF
20	075-050-025	TUBE ASSY, AIR CYL (4)	REF
19	601-420-017	ELBOW, 90°, #6 ORBM TO #6 JICM (4)	REF
18	601-420-040	ELBOW, 90°, BULKHEAD, #6 MJIC TO #6 MJCI (4)	REF
17	075-050-022	TUBE ASSY, LIFT CYLINDER (4)	REF
16	601-420-011	UNION, -6 JIC (4)	REF
15	601-510-006	CYLINDER, AIR, 1 1/16 BORE (4)	REF
14	ZZ1070-P-4XX	TUBE, BLACK PLASTIC, 1/4" x 12" LG. (4)	REF
13	601-520-002	ELBOW, 90°, 1/8 M NPT TO 1/4 TUBE (4)	REF
12	601-520-003	ELBOW, 1/4 M NPT TO 1/4 TUBE (4)	REF
11	601-420-084	STRAIGHT, 1/4" F NPT TO -6 M JIC (4)	REF
10	075-050-024	HOSE ASSY (4)	REF
9	075-050-023	HOSE ASSY (4)	REF
8	601-420-001	CAP NUT, -6 JIC (6)	REF
7	035-001-009	TUBE ASSY (12)	REF
6	050-000-027	TUBE ASSY, CROSSRAIL (6)	REF
5	601-420-015	ELBOW, 90 DEG, BULKHEAD, #6 MJIC TO #6 MJIC (20)	REF
4	000-001-036	TUBE ASSY (12)	REF
3	601-420-039	TEE, #6 JIC MALE ALL (12)	REF
2	075-010-008	HOSE ASSY, TRACK TO XRAIL (6)	REF
1	050-020-009	TRACK MANIFOLD ASSEMBLY (1)	REF

NOTICE OF CONFIDENTIAL INFORMATION

INFORMATION CONTAINED HEREIN IS CONFIDENTIAL AND PROPERTY OF MOHAWK RESOURCES LTD.. WHERE DRAWING IS FURNISHED TO OTHERS IT SHALL BE USED SOLELY FOR PURPOSES OF INSPECTION, INSTALLATION, OR MAINTENANCE. THE INFORMATION SHALL NOT BE USED OR DISCLOSED BY THE RECIPIENT FOR ANY OTHER PURPOSES WHATSOEVER.

NOTES:
1. REMOVE ALL SHARP CORNERS & EDGES.
2. UNLESS OTHERWISE SPECIFIED, SURFACE FINISH TO BE 125 RMS.
3. WELDING MEDIUM SHALL CONFORM TO AWS SPECIFICATIONS TO E-70XX ELECTRODES OR E-70T1 CODE 5.3 FLUX CORE WIRE ONLY.

TOLERANCES:
ANGULAR ± 1°
FRACTIONAL ± .030
DECIMAL:
0.XX ± .030
0.XXX ± .005

FILE NAME 075-050-085

033-002-000
NEXT ASSEMBLY

SCALE 1/4=1	DRAWN R.V.	MOHAWK RESOURCES LTD.	
CHECKED	APPROVED	TITLE (CROSSRAILS TO MAIN TRK) FITTING LIST, TR-SERIES (2007)	
DATE 10/07	WEIGHT N/A LB.	FROM N/A	DRAWING NUMBER 075-050-085 △

D-SIZE

REV.	DESCRIPTION	DATE	BY	APP'D.
△				

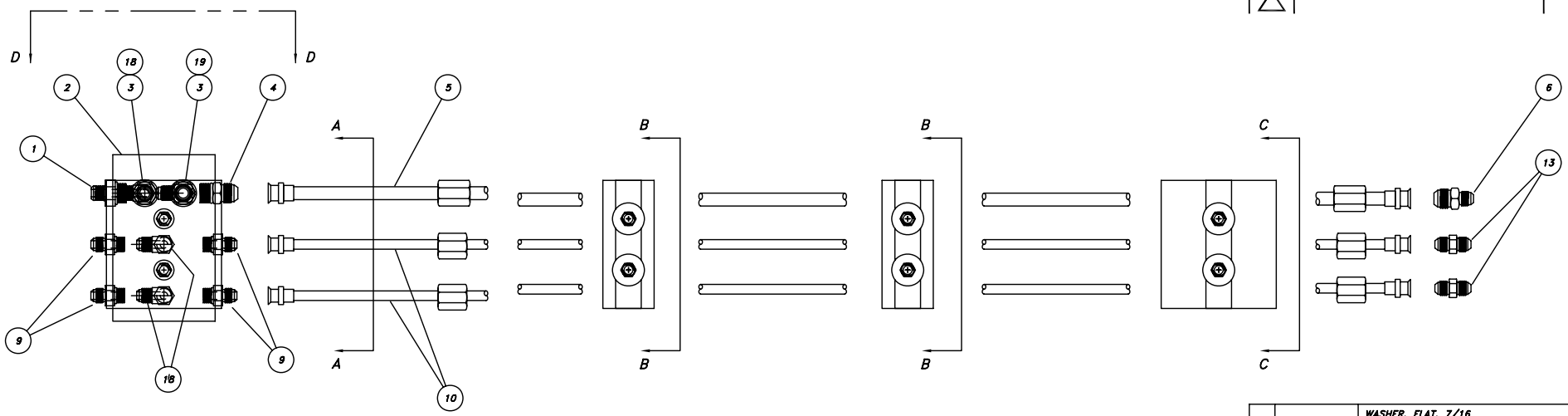

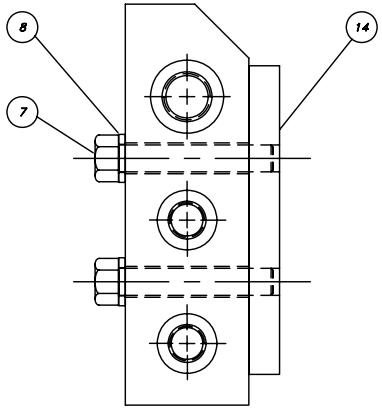

SECTION A–A

(FULL SCALE)

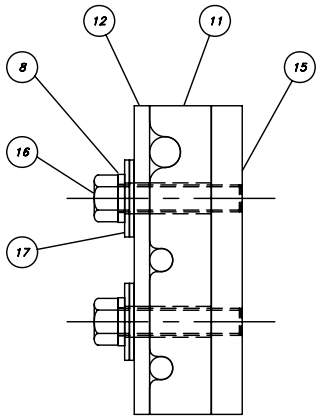

SECTION B–B

(FULL SCALE)

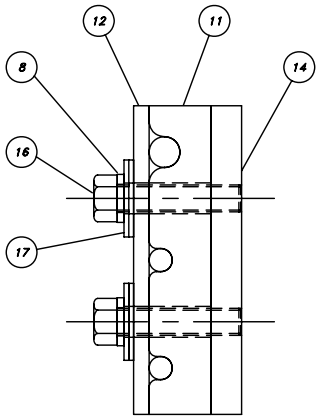

SECTION C–C

(FULL SCALE)

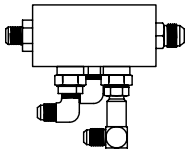

VIEW D–D:

(HALF SCALE)

ITEM	PART NUMBER	DESCRIPTION	QTY
19	601–420–054	FITTING, TALL ELBOW, 90°, #6 M ORB TO #6 M JIC	1
18	601–420–017	FITTING, ELBOW, 90°, #6 M ORB TO #6 M JIC	3

ITEM	PART NUMBER	DESCRIPTION	QTY
17	600–710–005	WASHER, FLAT, 7/16	12
16	600–640–051	BOLT, HEX HEAD, 7/16–14 NC x 2" LG	6
15	050–010–107	WELDABLE MOUNTING PLATE (TRACK TUBINGS)	2
14	050–010–108	WELDABLE MOUNTING PLATE (TRACK MANIFOLD)	2
13	601–420–011	FITTING, UNION, –6 JIC TO –6 JIC	2
12	035–001–105	STRIP, CLAMP	3
11	035–001–106	BLOCK, RUBBER	3
10	000–001–080	TUBING ASSEMBLY, 3/8" x 204" LG	2
9	601–420–019	FITTING, STRAIGHT, #6 ORB TO –6 JIC	4
8	600–720–004	WASHER, LOCK	8
7	600–640–026	BOLT, HEX HEAD, GRADE 8	2
6	601–420–086	FITTING, UNION, –8 JIC TO –6 JIC	1
5	000–003–006	TUBING ASSEMBLY, 1/2" x 203 3/4" LG	1
4	601–420–037	FITTING, STRAIGHT, #8 ORB TO –8 JIC	1
3	601–420–045	REDUCER, #8 ORB MALE TO #6 ORB FEMALE	2
2	035–001–104	'FORE' MANIFOLD	1
1	601–420–024	FITTING, STRAIGHT, #8 ORB TO –6 JIC	1

NOTES:

RUBBER BLOCKS TO BE SPACED EVENLY ON ASSEMBLY AND WHOLE ASSEMBLY TO BE CENTERED ON TRACK. SEE MAINSIDE TRACK ASSEMBLY.

NOTICE OF CONFIDENTIAL INFORMATION

INFORMATION CONTAINED HEREIN IS CONFIDENTIAL AND PROPERTY OF MOHAWK RESOURCES LTD., WHERE DRAWING IS FURNISHED TO OTHERS IT SHALL BE USED SOLELY FOR PURPOSES OF INSPECTION, INSTALLATION, OR MAINTENANCE; THE INFORMATION SHALL NOT BE USED OR DISCLOSED BY THE RECIPIENT FOR ANY OTHER PURPOSES WHATSOEVER.

NOTES:
1. REMOVE ALL SHARP CORNERS & EDGES.
2. UNLESS OTHERWISE SPECIFIED, SURFACE FINISH TO BE 125 RMS.
3. WELDING MEDIUM SHALL CONFORM TO AWS SPECIFICATIONS TO E-70XX ELECTRODES OR E-70T1 CODE 5.3 FLUX CORE WIRE ONLY.

TOLERANCES:
ANGULAR ± 1°
FRACTIONAL ± .030
DECIMAL:
0.XX ± .020
0.XXX ± .005

FILE NAME
I20009

050–020–005
NEXT ASSEMBLY

SCALE 1/2	DRAWN dak	MOHAWK RESOURCES LTD.	
CHECKED RV	APPROVED	TITLE (20 FT TRACKS) TRACK MANIFOLD ASSEMBLY	
DATE 11/98	WEIGHT 20 LB.	FROM N/A	DRAWING NUMBER 050–020–009 △

D–SIZE

MAN1307

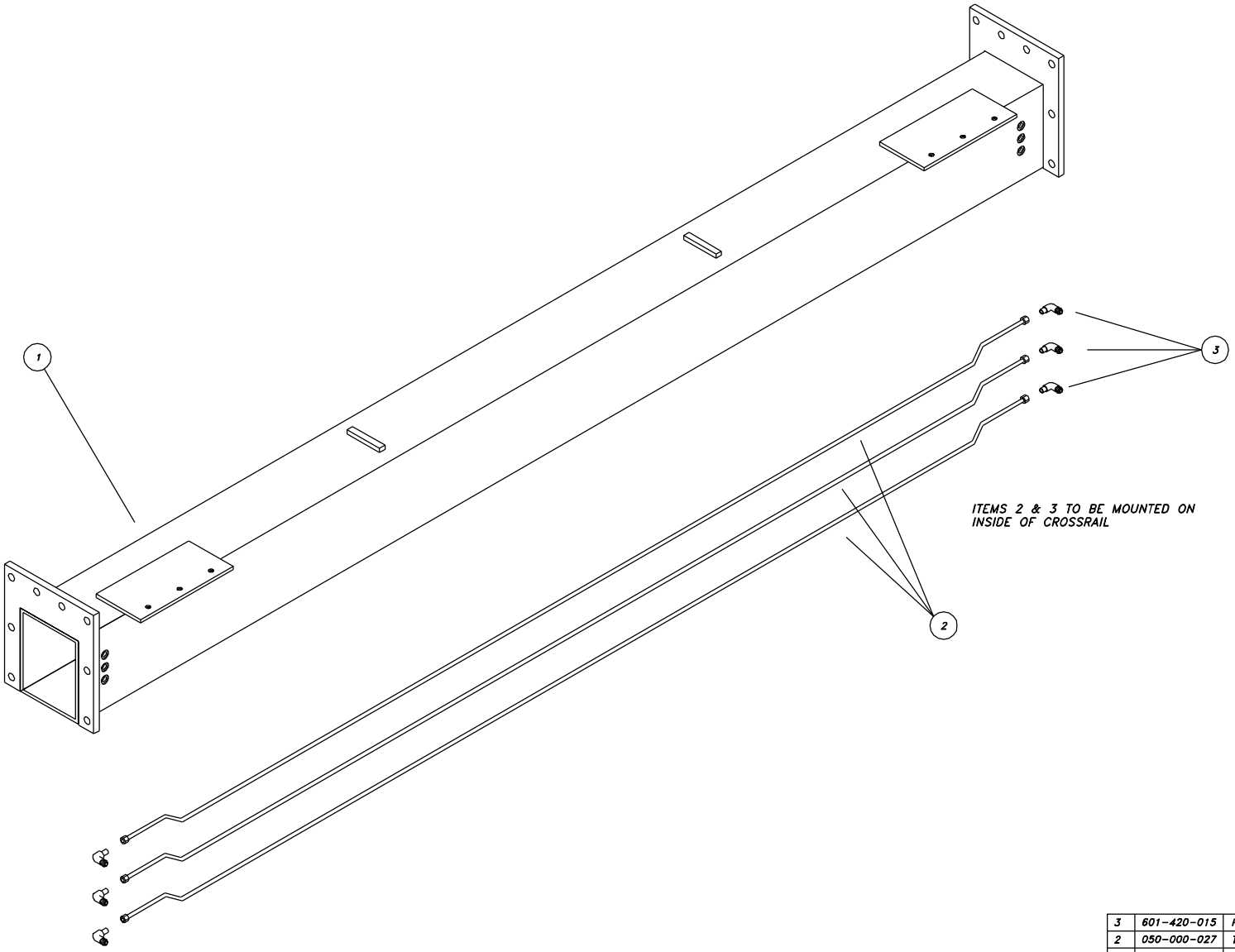

(2) CROSSRAILS PER LIFT

ITEM	PART NUMBER	DESCRIPTION	QTY
3	601-420-015	FITTING, 90° ELBOW, BULKHEAD	6
2	050-000-027	TUBING ASSEMBLY, 126"	3
1	050-000-006	CROSSRAIL WELDMENT	1

CROSSRAIL ASSEMBLY
(050-010-008)

FILE: MAN1307
DATE: 7/96

MAN1408

REV-A 10/99

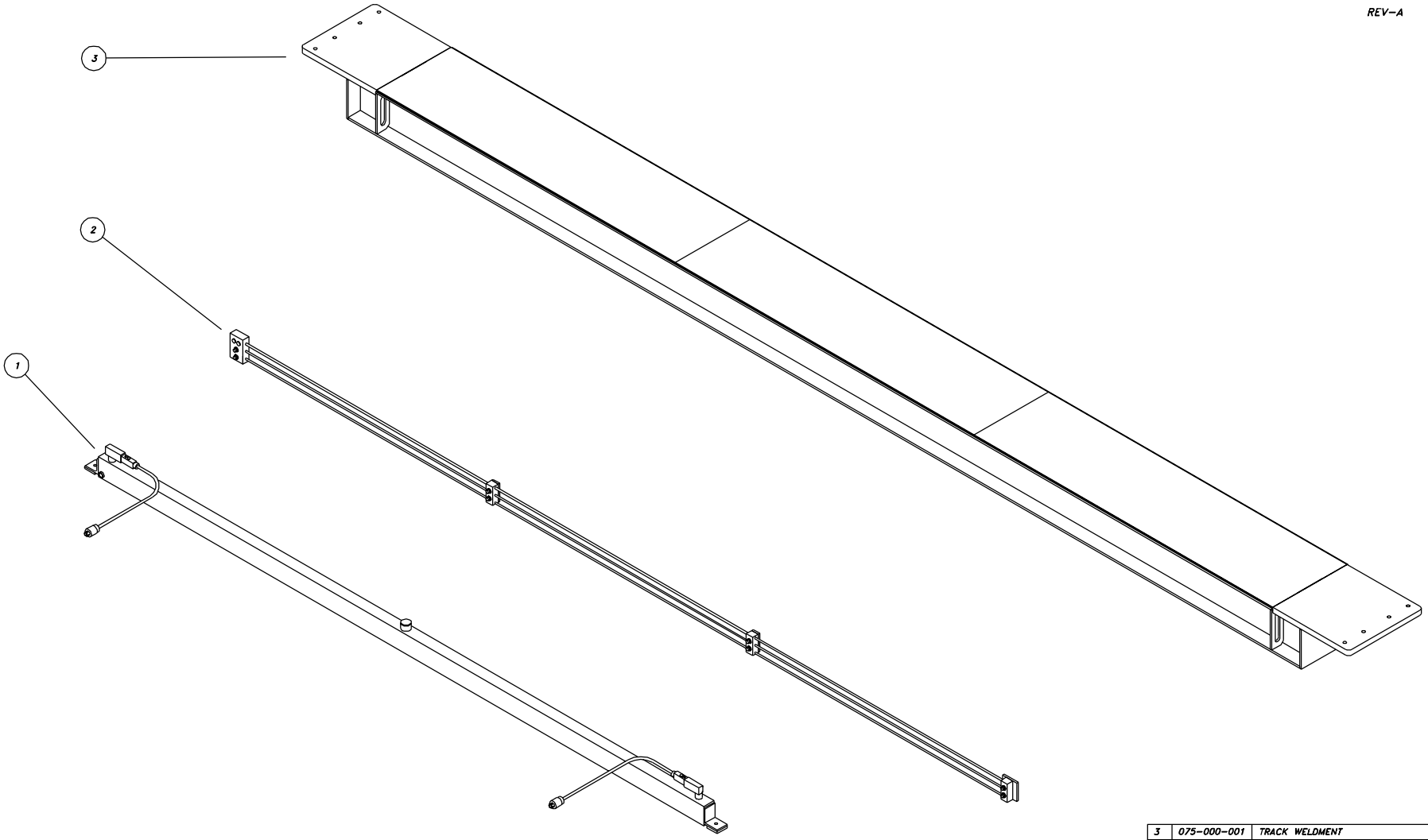

ITEM	PART NUMBER	DESCRIPTION	QTY
3	075-000-001	TRACK WELDMENT	1
2	MAN1319	TRACK MANIFOLD ASSEMBLY	1
1	MAN1318A	TRACK LEVELER ASSEMBLY	1

MAINSIDE TRACK ASSEMBLY

(075-010-005)

FILE: MAN1408
DATE: 8/96

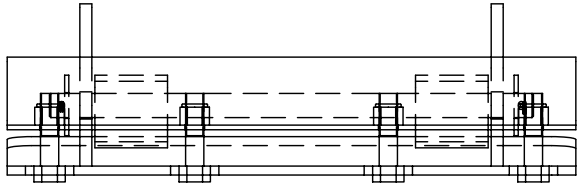

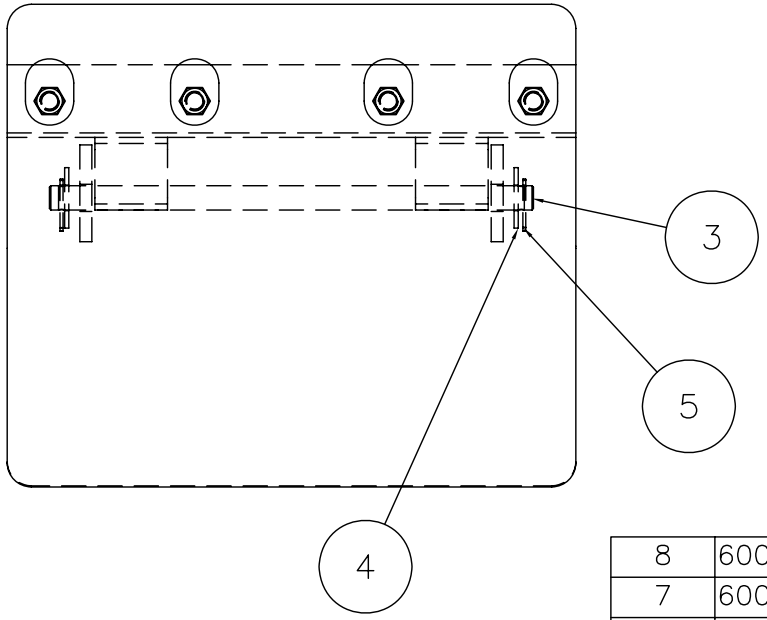

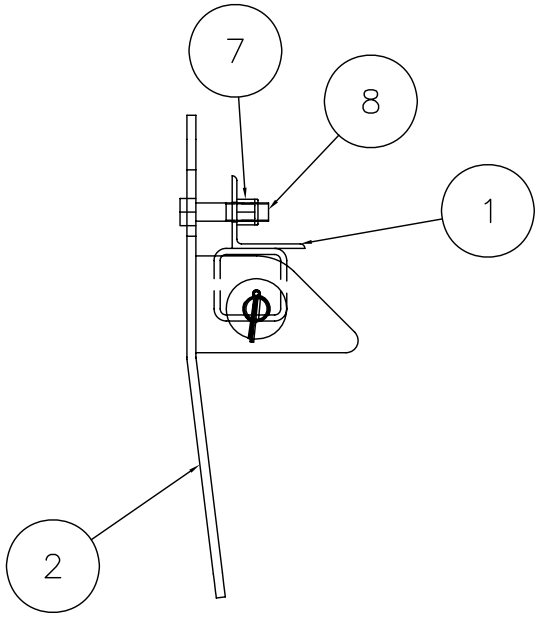

ITEM	NAME	DESCRIPTION	QTY
8	600-640-072	Bolt, Hex Head, 3/4-16 NF x 3" (GR8)	4
7	600-690-003	Nut, Nylon Lock, 3/4-16 NF	4
5	600-890-006	Cotter Pin, 1/8 Dia x 1 3/4 Lg	2
4	600-710-010	Washer, Flat, 1"	2
3	P-160-P-001	Tilt Bar	1
2	075-050-002	Transition Plate Weldment	1
1	075-050-001	TRACK STOP RECIEVER WELDMENT	1

Parts List

C-SIZE

NOTICE OF CONFIDENTIAL INFORMATION

INFORMATION CONTAINED HEREIN IS CONFIDENTIAL AND PROPERTY OF MOHAWK RESOURCES LTD.. WHERE DRAWING IS FURNISHED TO OTHERS IT SHALL BE USED SOLELY FOR PURPOSES OF INSPECTION, INSTALLATION, OR MAINTENANCE. THE INFORMATION SHALL NOT BE USED OR DISCLOSED BY THE RECIPIENT FOR ANY OTHER PURPOSES WHATSOEVER.

NOTES:
1. REMOVE ALL SHARP CORNERS & EDGES.
2. UNLESS OTHERWISE SPECIFIED, SURFACE FINISH TO BE 125 RMS.
3. WELDING MEDIUM SHALL CONFORM TO AWS SPECIFICATIONS TO E-70XX ELECTRODES OR E-70TI CODE 5.3 FLUX CORE WIRE ONLY.

TOLERANCES:
ANGULAR ± 1°
FRACTIONAL ± .030
DECIMAL:
0.XX ± .030
0.XXX ± .005

FILE NAME 075-050-003

075-050-

NEXT ASSEMBLY

SCALE	DRAWN	MOHAWK RESOURCES LTD.
1/4	dak	
CHECKED	APPROVED	TITLE WHEEL STOP ASSEMBLY
DATE 10/07	WEIGHT 72.71 LB.	FROM / DRAWING NUMBER 075-050-003

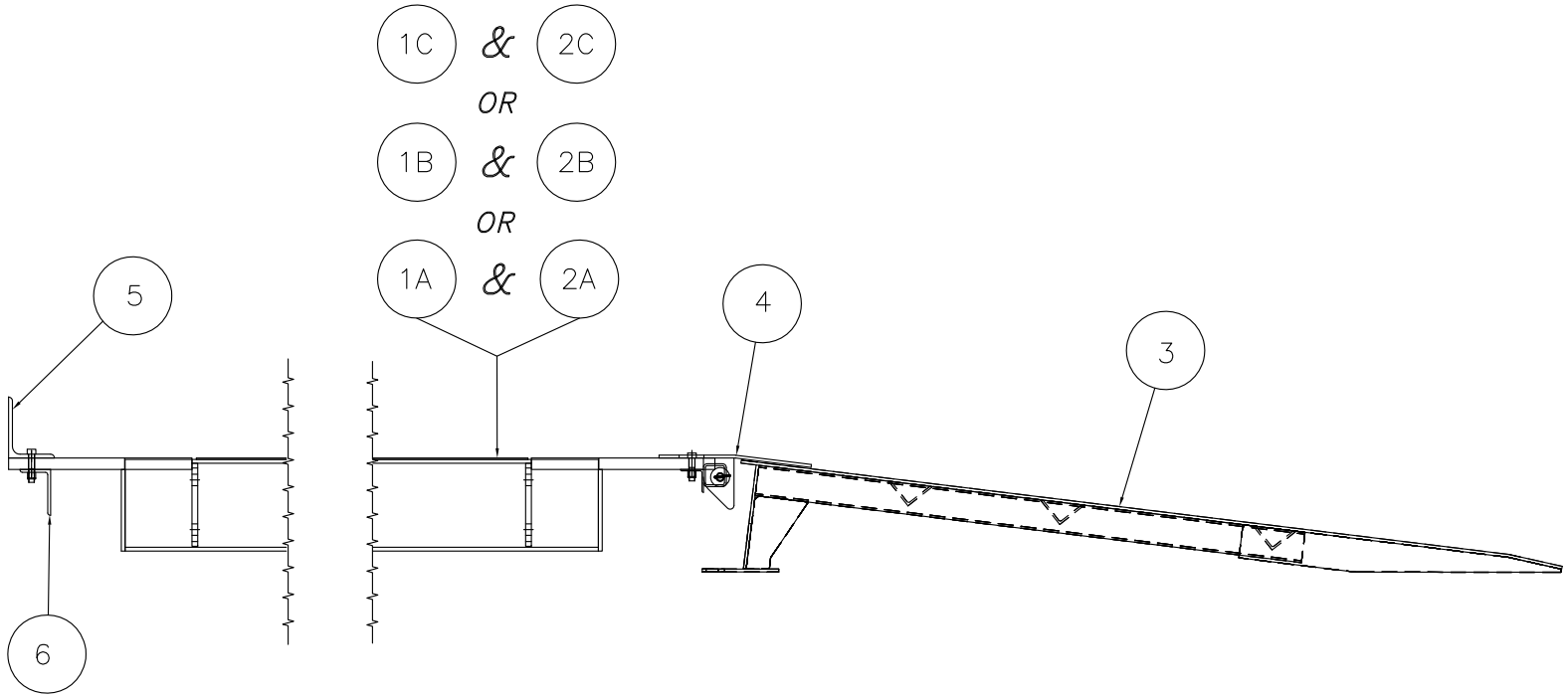

WIDE TRACK (WT) PARTS ONLY

ITEM	PART NUMBER	DESCRIPTION	QTY
6	ZZ1175-P-004	LOWER TRACK STOP (1)	REF
5	ZZ1175-P-003	TRACK STOP (1)	REF
4	ZZ1175-A-001	WHEEL STOP ASSEMBLY (1)	REF
3	ZZ1175-W-004	RAMP WELDMENR (8') (1)	REF
2C	ZZ1175-A-007	TRACK ASSEMBLY (20') MAIN (1)	REF
2B	ZZ1175-A-006	TRACK ASSEMBLY (25') MAIN (1)	REF
2A	ZZ1175-W-003	TRACK ASSEMBLY (30') MAIN (1)	REF
1C	ZZ1175-W-014	TRACK SECONDARY WELDMENT (20') (1)	REF
1B	ZZ1175-W-009	TRACK SECONDARY WELDMENT (25') (1)	REF
1A	ZZ1175-W-008	TRACK SECONDARY WELDMENT (30') (1)	REF

NOTICE OF CONFIDENTIAL INFORMATION

INFORMATION CONTAINED HEREIN IS CONFIDENTIAL AND PROPERTY OF MOHAWK RESOURCES LTD.. WHERE DRAWING IS FURNISHED TO OTHERS IT SHALL BE USED SOLELY FOR PURPOSES OF INSPECTION, INSTALLATION, OR MAINTENANCE; THE INFORMATION SHALL NOT BE USED OR DISCLOSED BY THE RECIPIENT FOR ANY OTHER PURPOSES WHATSOEVER.

NOTES:
1. REMOVE ALL SHARP CORNERS & EDGES.
2. UNLESS OTHERWISE SPECIFIED, SURFACE FINISH TO BE 125 RMS.
3. WELDING MEDIUM SHALL CONFORM TO AWS SPECIFICATIONS TO E-70XX ELECTRODES OR E-70T1 CODE 5.3 FLUX CORE WIRE ONLY.

TOLERANCES:
ANGULAR ± 1°
FRACTIONAL ± .030
DECIMAL:
0.XX ± .030
0.XXX ± .005

FILE NAME ZZ1175-A-005

NEXT ASSEMBLY

SCALE NONE	DRAWN G.GORE	MOHAWK RESOURCES LTD.	
CHECKED	APPROVED	TITLE WIDE TRACK PARTS ILLUSTRATION	
DATE 08/12	WEIGHT N/A LB.	FROM	DRAWING NUMBER ZZ1175-A-005

D-SIZE

REV.	DESCRIPTION	DATE	BY	APP'D.
△				

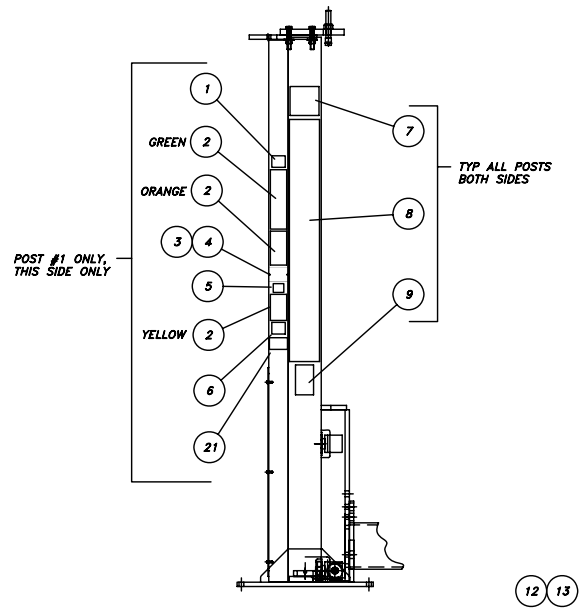

VIEW A–A

(POST #1 ONLY)

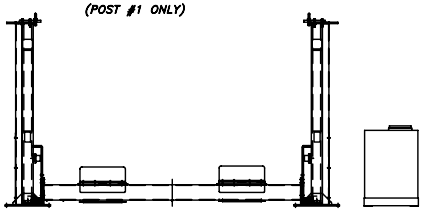

12 13

ONE OF EACH TO BE PLACED ON EACH CYLINDER, TYP (4) PLACES

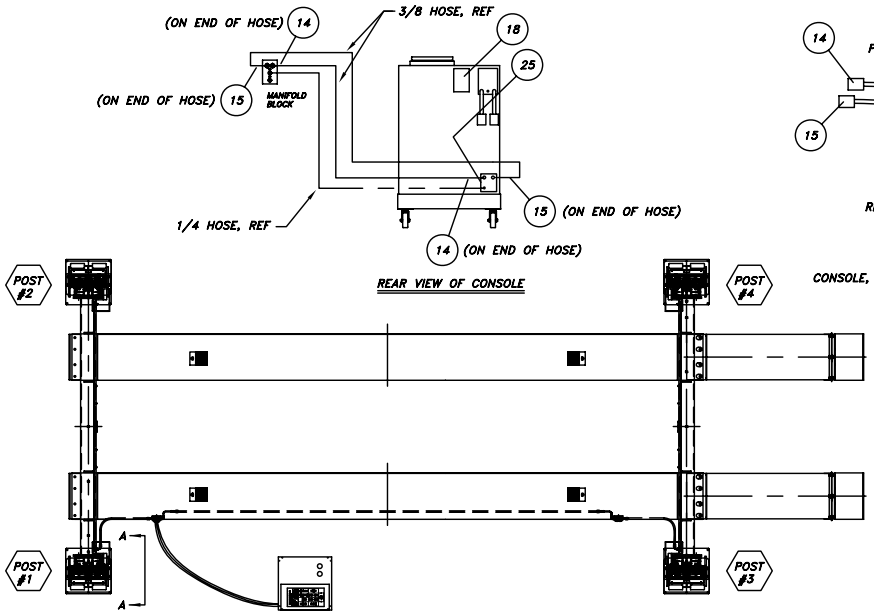

17 20

(NOT SHOWN)

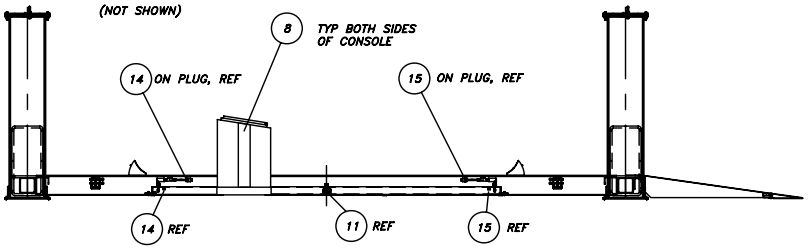

SEE 033-002-045 FOR LOCATION OF ITEM 20

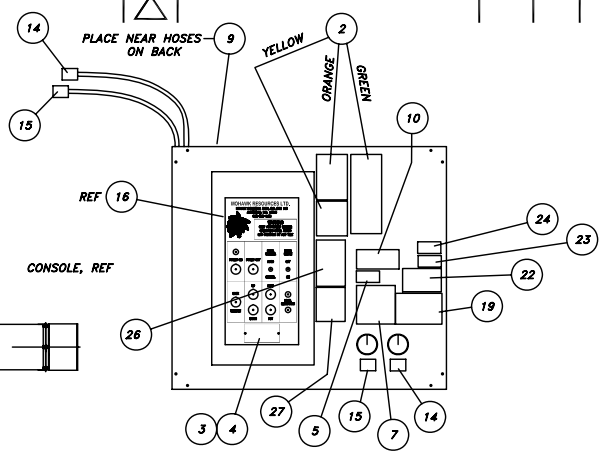

ENLARGED TOP VIEW OF CONSOLE

SEE 033-002-045 FOR LOCATION

ITEM	PART NUMBER	DESCRIPTION	QTY
27	601-800-308	DECAL, CAUTION... WARNING...	1
26	601-800-215	DECAL, MOBILE POST, WARNING, SAFETY, NOTICE	1
25	601-800-306	LABEL, REAR CONSOLE PORTS, 4 1/2 x 5"	1
24	601-800-298	LABEL, "SAFETY INSTRUCTIONS"	1
23	601-800-056	DECAL, ALI/ETL CERTIFIED	1

ITEM	PART NUMBER	DESCRIPTION	QTY
22	601-800-136	DECAL, "CENTER LOAD ON LIFT"	1
21	601-800-126	DECAL, TOTAL AGGREGATE JACKING CAPACITY	1
20	601-800-124	DECAL, CAUTION....REPLACE ONLY WITH TYPE.....FUSE (2)	REF
19	601-800-108	DECAL, WARNING....RISK OF EXPLOSION....	1
18	601-800-304	DECAL, TR-SERIES CONSOLE ELECTRICAL RATINGS	1

ITEM	PART NUMBER	DESCRIPTION	QTY
17	601-800-118	DECAL, WARNING....PRESSURE TO AIR LOCKS (1)	REF
16	601-800-099	DECAL, TR-33 CONTROL PANEL, 9 1/2 x 19" (1)	REF
15	601-800-071	DECAL, "FORE", 1/2 x 2"	4
14	601-800-072	DECAL, "AFT", 1/2 x 2"	4
13	601-800-022	PLATE, PATENT, 7/8 x 2 3/8	4
12	601-800-021	PLATE, CAUTION, "NO USER SERVICEABLE PARTS"	4
11	601-800-062	DECAL, "ANTIFREEZE ONLY", 2" x 4" (1)	REF
10	601-800-102	DECAL, "ALWAYS LOWER ON MECH LOCKS"	1
9	601-800-030	DECAL, "MADE IN AMERICA", 3 1/8 x 5 3/16	9
8	601-800-061	DECAL, "MOHAWK", 6 3/8 x 41 3/4	10
7	601-800-###	DECAL, MAXIMUM CAPACITY DECAL	9
6	601-800-034	DECAL, WARNING, 2" x 3 1/2	1
5	601-800-037	PLATE, ALI, 1 1/2 x 3 1/4	2
4	600-620-001	DRIVE SCREW, #4 x 1/4, TYPE U, ROUND HEAD	4
3	601-800-026	PLATE, SERIAL, SPEC, PATENT, 2 7/16 x 4 9/16	2
2	601-800-053	DECAL SET, CAUTION, WARNING, SAFETY, 4 POST	2
1	601-800-035	DECAL, CAUTION, 2" x 3 1/2	1

NOTICE OF CONFIDENTIAL INFORMATION

INFORMATION CONTAINED HEREIN IS CONFIDENTIAL AND PROPERTY OF MOHAWK RESOURCES LTD., WHERE DRAWING IS FURNISHED TO OTHERS IT SHALL BE USED SOLELY FOR PURPOSES OF INSPECTION, INSTALLATION, OR MAINTENANCE. THE INFORMATION SHALL NOT BE USED OR DISCLOSED BY THE RECIPIENT FOR ANY OTHER PURPOSES WHATSOEVER.

NOTES:
1. REMOVE ALL SHARP CORNERS & EDGES.
2. UNLESS OTHERWISE SPECIFIED, SURFACE FINISH TO BE 125 RMS.
3. WELDING MEDIUM SHALL CONFORM TO AWS SPECIFICATIONS TO E-70XX ELECTRODES OR E-70T1 CODE 5.3 FLUX CORE WIRE ONLY.

TOLERANCES:
ANGULAR ± 1°
FRACTIONAL ± .030
DECIMAL:
0.XX ± .030
0.XXX ± .005

FILE NAME 075-050-XXX

075-050-

NEXT ASSEMBLY

SCALE	DRAWN	MOHAWK RESOURCES LTD.
1/32	dak	
CHECKED	APPROVED	TITLE TAG & DECAL LOCATIONS
DATE 10/07	WEIGHT N/A LB.	FROM
		DRAWING NUMBER 075-050-XXX △

D-SIZE

MAN1454

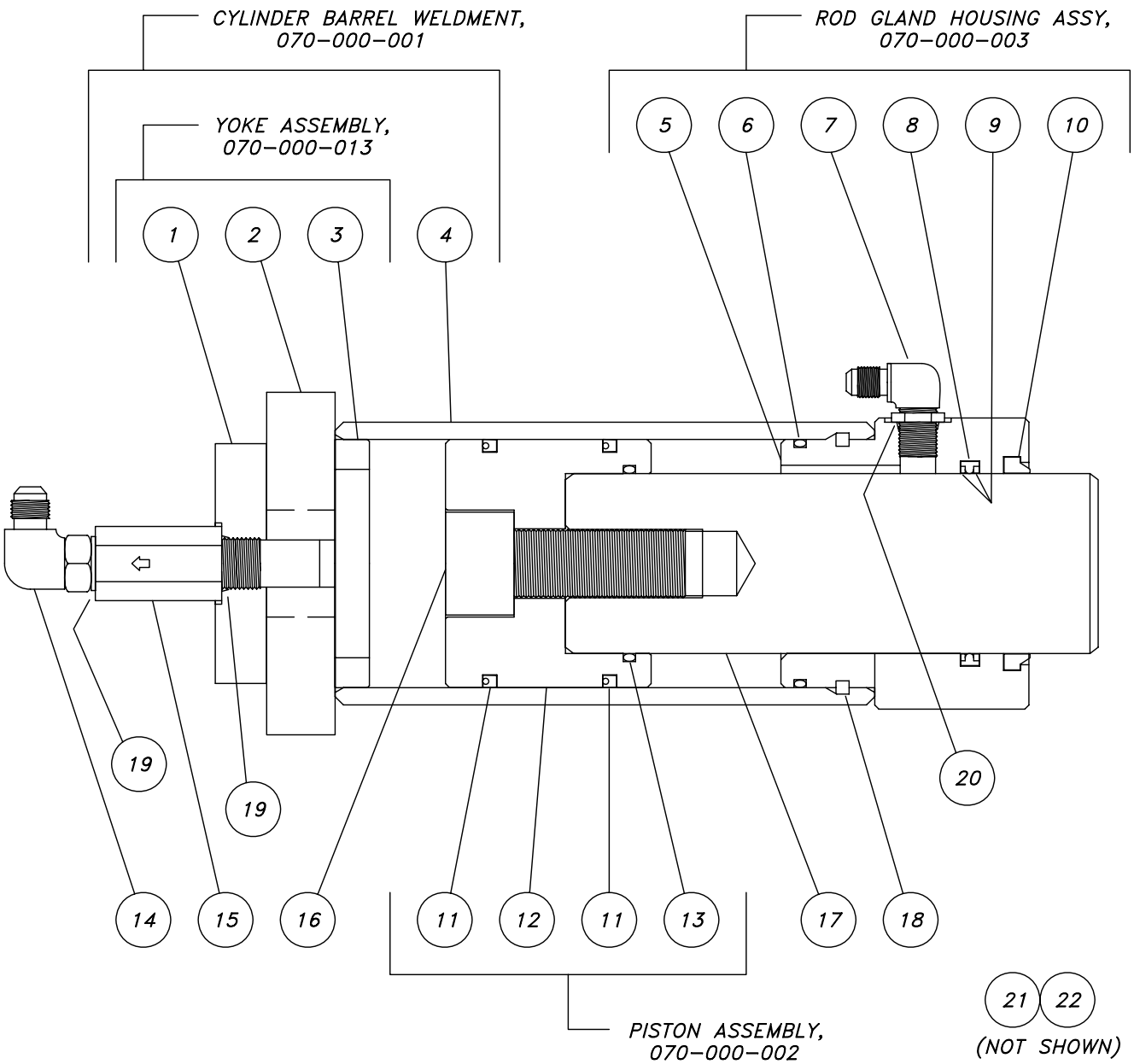

ITEM	PART NUMBER	DESCRIPTION	QTY
1	050-000-144	BACK PLATE	1
2	050-000-139	YOKE	1
3	070-000-112	YOKE DONUT	1
4	070-000-102	BARREL	1
5	070-000-103	ROD GLAND	1
6	601-030-021	O-RING	1
7	601-420-017	FITTING, 90°	1
8	601-000-003	ROD T-SEAL	1
9	601-060-007	BACK-UP RING	2
10	601-020-003	ROD WIPER	1
11	601-050-004	POLY-PAK	2
12	070-000-101	PISTON	1
13	601-030-014	O-RING	1
14	601-420-023	FITTING, 90° ELBOW	1
15	601-410-035	VELOCITY FUSE -10	1
16	600-650-001	BOLT, SOCKET HEAD	1
17	050-000-136	ROD	1
18	070-000-104	SPIN KEY	1
19	601-030-018	O-RING	2
20	601-030-017	O-RING	1
21	601-800-021	PLATE, CAUTION "NO USER SERVICEABLE PARTS"	1
22	601-800-022	PLATE, PATENT	1

TR-SERIES
CYLINDER ASSEMBLY
ZZ1070-A-016

FILE: MAN1454
DATE: 10/07

REV.	DESCRIPTION	DATE	BY	APP'D.
△				

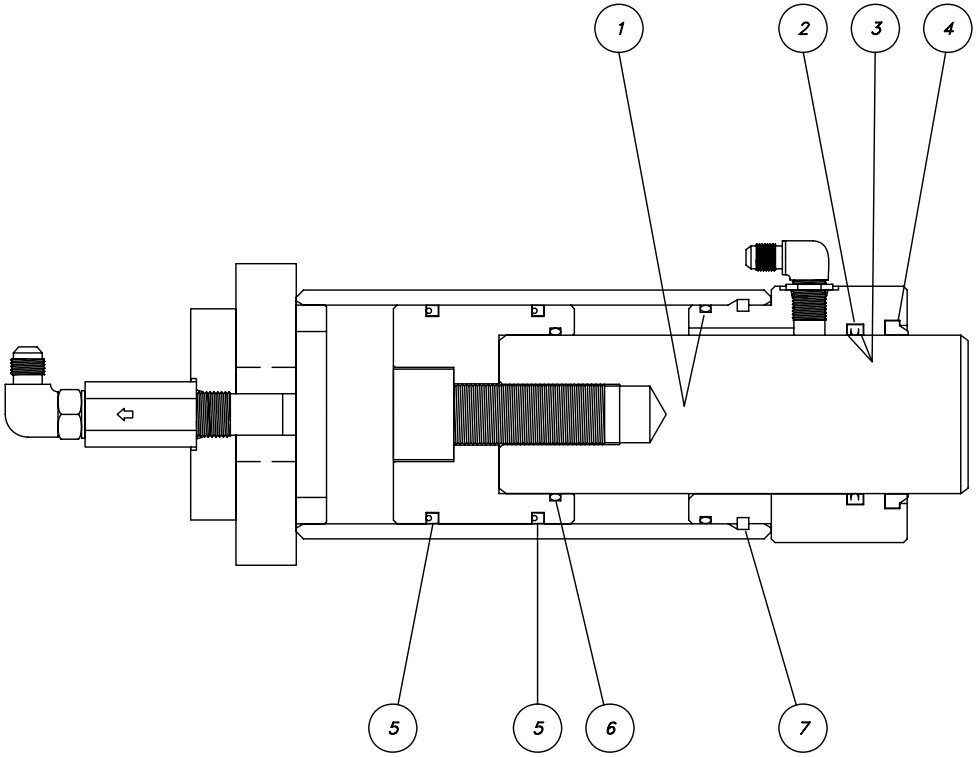

8

(NOT SHOWN)

FOR TR-SERIES
CYLINDER ASSEMBLY
ZZ1070-A-016

ITEM	PART NUMBER	DESCRIPTION	QTY
8	MAN1410	CYLINDER DRAWING (SERVICE)	1
7	070-000-104	SPIN KEY	1
6	601-030-014	O-RING	1
5	601-050-004	POLYPACK SEAL, PISTON	2
4	601-020-003	ROD WIPER	1
3	601-060-007	BACK-UP RING	2
2	601-000-003	ROD T-SEAL	1
1	601-030-021	O-RING	1

C-SIZE

NOTICE OF CONFIDENTIAL INFORMATION

INFORMATION CONTAINED HEREIN IS CONFIDENTIAL AND PROPERTY OF MOHAWK RESOURCES LTD. WHERE DRAWING IS FURNISHED TO OTHERS IT SHALL BE USED SOLELY FOR PURPOSES OF INSPECTION, INSTALLATION, OR MAINTENANCE. THE INFORMATION SHALL NOT BE USED OR DISCLOSED BY THE RECIPIENT FOR ANY OTHER PURPOSES WHATSOEVER.

NOTES:
1. REMOVE ALL SHARP CORNERS & EDGES.
2. UNLESS OTHERWISE SPECIFIED, SURFACE FINISH TO BE 125 RMS.
3. WELDING MEDIUM SHALL CONFORM TO AWS SPECIFICATIONS TO E-70XX ELECTRODES OR E-70TI CODE 5.3 FLUX CORE WIRE ONLY.

TOLERANCES:
ANGULAR ± 1°
FRACTIONAL ± .030
DECIMAL:
0.XX ± .030
0.XXX ± .005

FILE NAME ZZ1070-A-017

NEXT ASSEMBLY

SCALE	DRAWN	MOHAWK RESOURCES LTD.
N/A	RV	
CHECKED	APPROVED	TITLE SEAL KIT, TR-SERIES
DATE 10/07	WEIGHT N/A LB.	FROM / DRAWING NUMBER ZZ1070-A-017 △

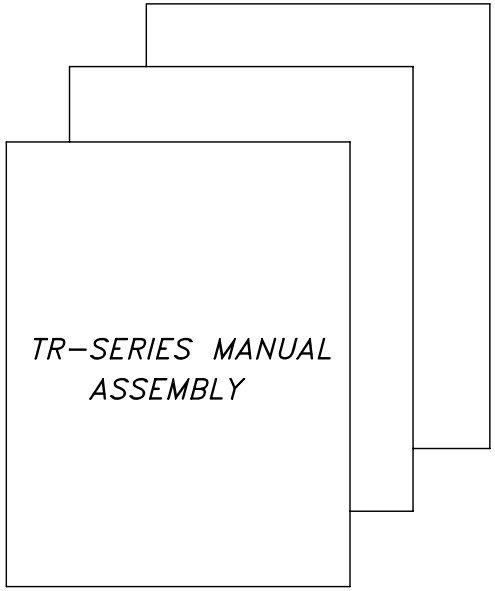

ITEM 3

WARRANTY
REGISTRATION
CARD PACKAGE

ITEM 7
(SECURED TO OUTSIDE OF ITEM 1 CARTON)

MAN1456

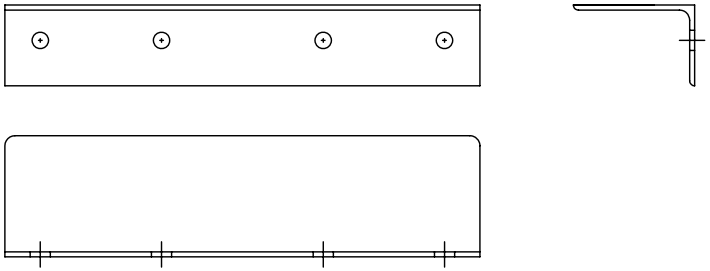

ITEM 2

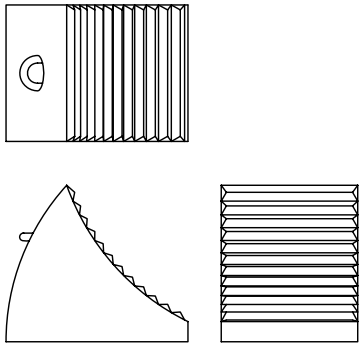

ITEM 5

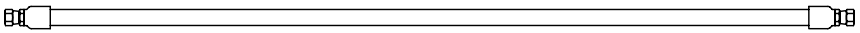

ITEM 4

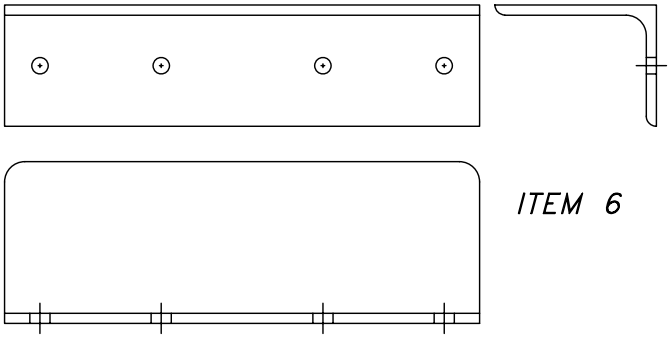

ITEM 6

ITEM	PART NUMBER	DESCRIPTION	QTY
7	601-800-070	WARRANTY REGISTRATION CARD PACKAGE	1
6	050-000-157	TRACK STOP, TOP	2
5	600-930-001	RUBBER WHEEL CHOCK	4
4	075-010-008	HOSE ASSEMBLY	6
3	075-050-021	TR-SERIES MANUAL ASSEMBLY	1
2	033-000-116	TRACK STOP, BOTTOM	2
1	601-600-023	BOX, CORRUGATED	1

PARTS BOX #1

FILE: MAN1456
DATE: 10/07

MAN1457

REV-A 10/30/12

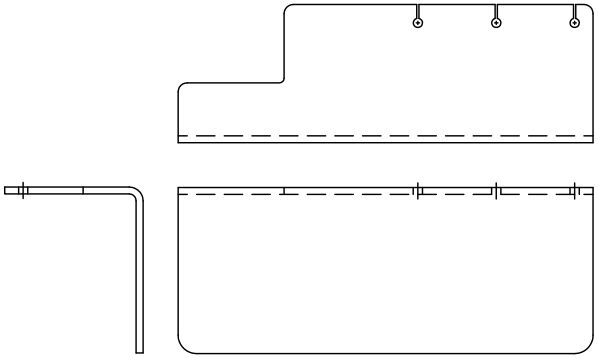

ITEM 2

ITEM 5

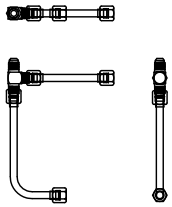

ITEM 12

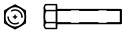

ITEM 6

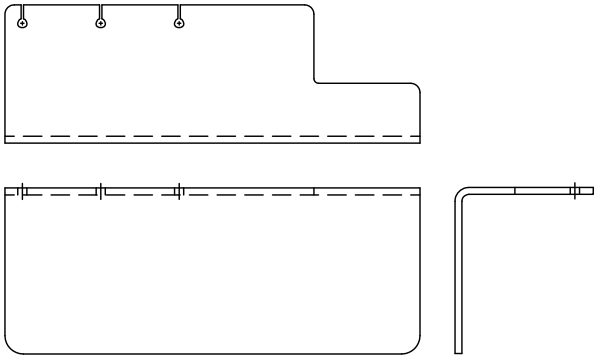

ITEM 3

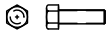

ITEM 7

SMALL PARTS BAG

ITEM 11

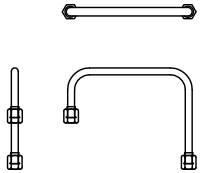

ITEM 13

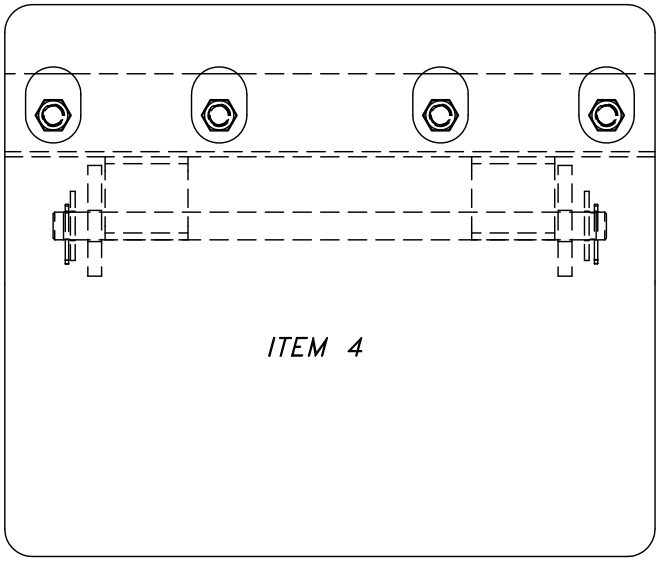

ITEM 4

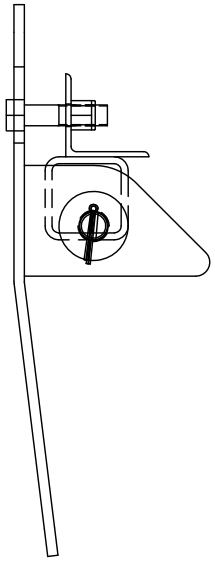

ITEM 8

ITEM	PART NUMBER	DESCRIPTION	QTY
13	050-000-032	TUBING ASSEMBLY, 13 1/8"	6
12	035-001-006	TUBING ASSEMBLY CLUSTER W/TEE	6
11	050-010-016	SMALL PARTS BAG	1
10			
9			
8	600-670-002	ANCHOR BOLT, WEJ-IT, 3/4 x 5"	16
7	600-640-024	BOLT, 3/4-16 NF x 2 1/2"	32
6	600-640-028	BOLT, 3/4-16 NF x 3 1/2"	16
5	600-690-003	NUT, LOCK, 3/4-16 NF	48
4	075-050-003	AUTOMATIC WHEEL STOP ASSY	2
3	050-010-116	CROSSRAIL LINE COVER (RIGHT)	2
2	050-010-115	CROSSRAIL LINE COVER (LEFT)	2
1	601-600-023	BOX, CORRUGATED	1

PARTS BOX #2

FILE: MAN1457
DATE: 10/07

MAN1314

REV-B 10/01

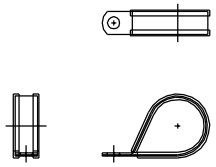

ITEM 2

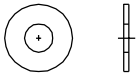

ITEM 6

ITEM 7

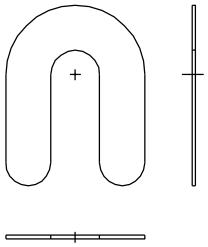

ITEM 9

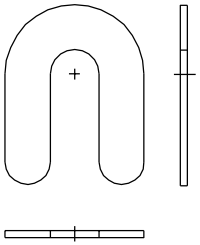

ITEM 10

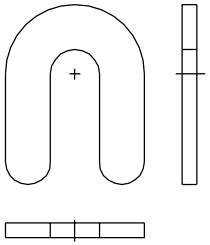

ITEM 11

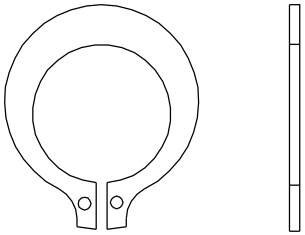

ITEM 3

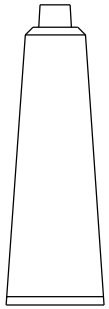

ITEM 8

ITEM 12

ITEM 13

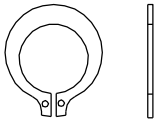

ITEM 4

ITEM 14

ITEM 15

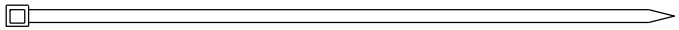

ITEM 16

ITEM 5

ITEM	PART NUMBER	DESCRIPTION	QTY
16	601-600-050	PLASTIC PULL TIE, BLACK, 8" LG	12
15	600-720-011	WASHER, LOCK, 3/8	12
14	600-680-012	NUT, PLAIN, 3/8-16 NC	12
13	600-710-009	WASHER, FLAT, 3/8	24
12	600-640-069	BOLT, 3/8-16 NC x 1 3/4 LG	12
11	600-740-003	SHIM, BLACK, 1/4", PLASTIC	10
10	600-740-002	SHIM, RED, 1/8", PLASTIC	10
9	600-740-001	SHIM, BLUE, 1/16", PLASTIC	10
8	601-610-002	THREAD SEALING COMPOUND	1
7	600-640-012	BOLT, 5/16-18 NC x 3/4"	20
6	600-710-012	WASHER, FLAT, 7/8"	4
5	600-690-010	NUT, LOCK, 7/8-14 NF	4
4	600-870-005	SNAP RING, #5100-75	4
3	600-870-004	SNAP RING, #5100-150	4
2	601-140-022	HOSE SUPPORT CLAMP	3
1	601-600-022	PLASTIC ZIP-LOCK BAG	1

SMALL PARTS BAG

FILE: MAN1314
DATE: 7/96

REV.	DESCRIPTION	DATE	BY	APP'D.
A	1) ITEM 10 WAS 600-640-022 BOLT 2) ITEM 11 WAS 600-720-004 LOCK WASHER 3) ITEM 12 WAS 600-710-005 PLAIN WASHER 4) ITEM 13 WAS 033-000-149 MTG PLATE ---ALL THE ABOVE WERE QTY (2)--- THESE PARTS MOVED TO TRACK ASSEMBLIES	11/00	dak	RV

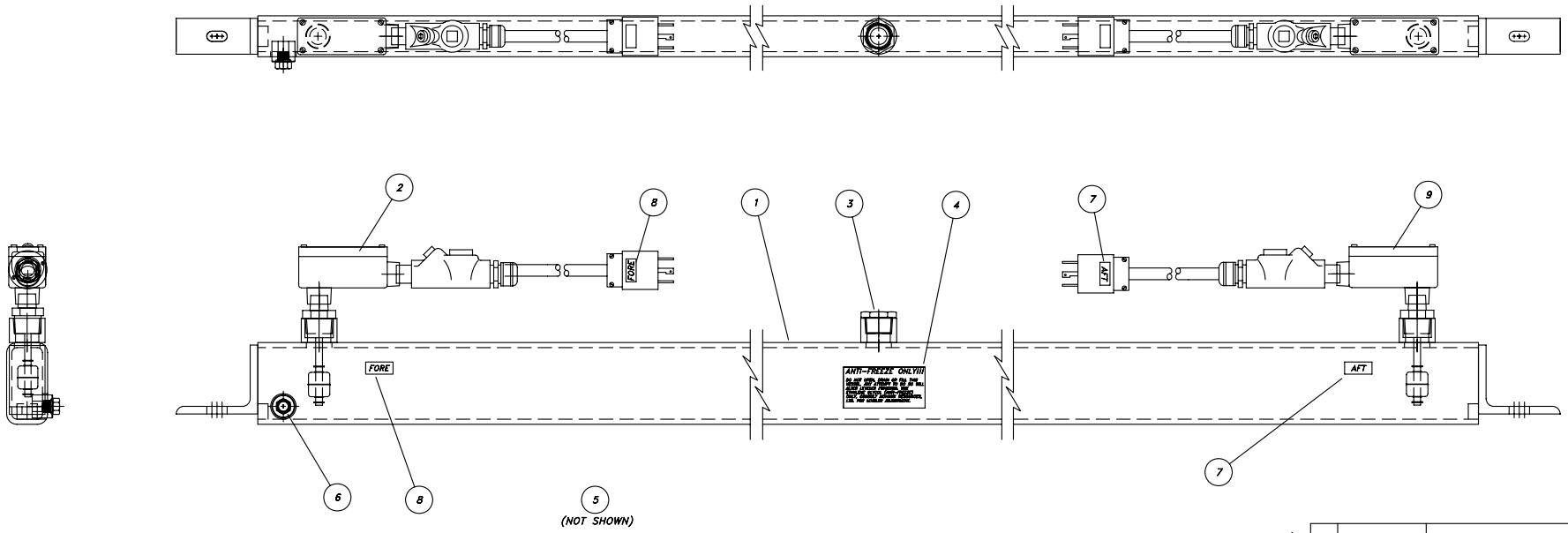

	ITEM	PART NUMBER	DESCRIPTION	QTY
A1	10			
	9	033-002-030	TRACK LEVELER FLOAT SWITCH ASSEMBLY	1
	8	601-800-072	DECAL, "FORE", 1/2 x 2"	2
	7	601-800-071	DECAL, "AFT", 1/2 x 2"	2
	6	601-420-041	PLUG, #6 ORB	1
	5	601-610-008	ANTIFREEZE (GALLONS)	2.00
	4	601-800-062	DECAL, "ANTIFREEZE ONLY", 2" x 4"	1
	3	601-450-016	PLUG, PIPE, 1" NPT	1
	2	033-002-029	TRACK LEVELER FLOAT SWITCH ASSEMBLY	1
	1	033-000-041	TRACK LEVELER WELDMENT	1

	ITEM	PART NUMBER	DESCRIPTION	QTY
A4	13			
A3	12			
A2	11			

NOTICE OF CONFIDENTIAL INFORMATION

INFORMATION CONTAINED HEREIN IS CONFIDENTIAL AND PROPERTY OF MOHAWK RESOURCES LTD., WHERE DRAWING IS FURNISHED TO OTHERS IT SHALL BE USED SOLELY FOR PURPOSES OF INSPECTION, INSTALLATION, OR MAINTENANCE. THE INFORMATION SHALL NOT BE USED OR DISCLOSED BY THE RECIPIENT FOR ANY OTHER PURPOSES WHATSOEVER.

NOTES:
1. REMOVE ALL SHARP CORNERS & EDGES.
2. UNLESS OTHERWISE SPECIFIED, SURFACE FINISH TO BE 125 RMS.
3. WELDING MEDIUM SHALL CONFORM TO AWS SPECIFICATIONS TO E-70XX ELECTRODES OR E-70T1 CODE 5.3 FLUX CORE WIRE ONLY.

TOLERANCES:
ANGULAR ± 1°
FRACTIONAL ± .030
DECIMAL:
0.XX ± .030
0.XXX ± .005

FILE NAME P02031

033-002-034
NEXT ASSEMBLY

SCALE 1/2	DRAWN dak	MOHAWK RESOURCES LTD.	
CHECKED RV	APPROVED	TITLE TRACK LEVELER ASSEMBLY	
DATE 6/98	WEIGHT 207.25 LB.	FROM	DRAWING NUMBER 033-002-031 A

D-SIZE

#	DESCRIPTION	DATE	APPROVED
A	050-004-106, 600-640-013, 600-690-005 & 600-710-004 ADDED	06/02/2008	dak0879
B	ITEM 12 WAS 600-600-027 VIEWS UPDATED	06/26/2008	DM

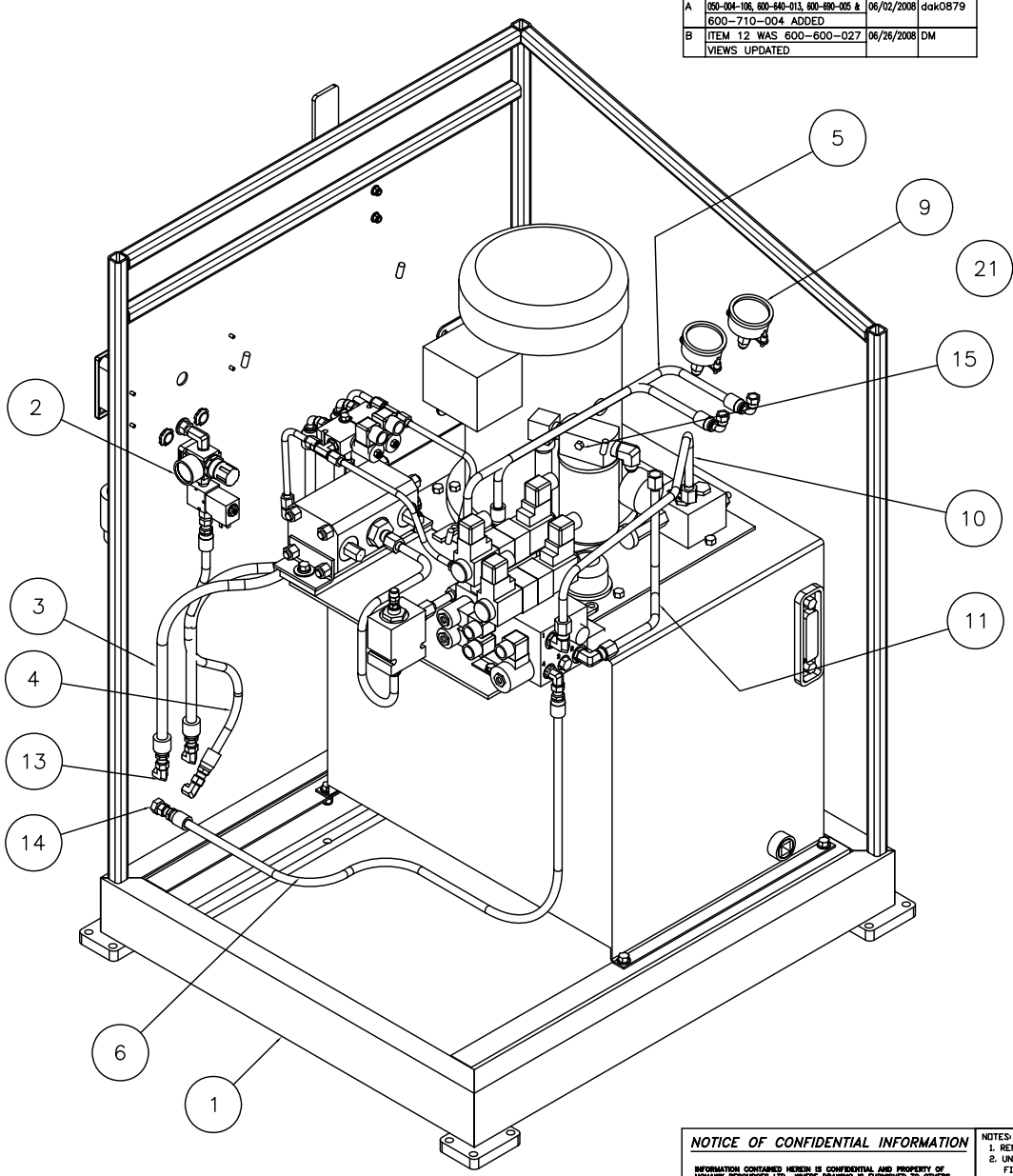

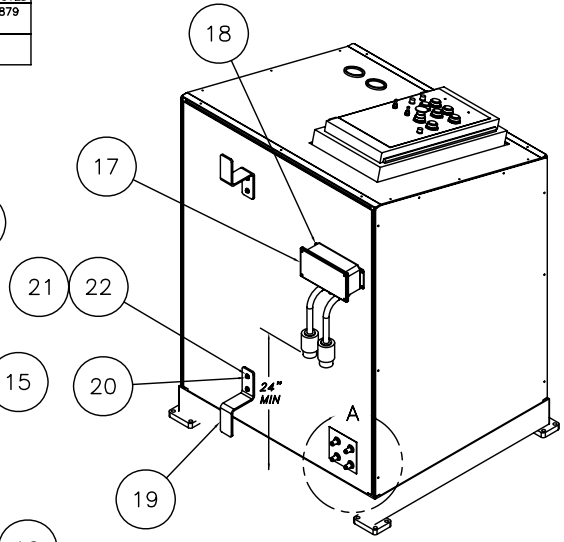

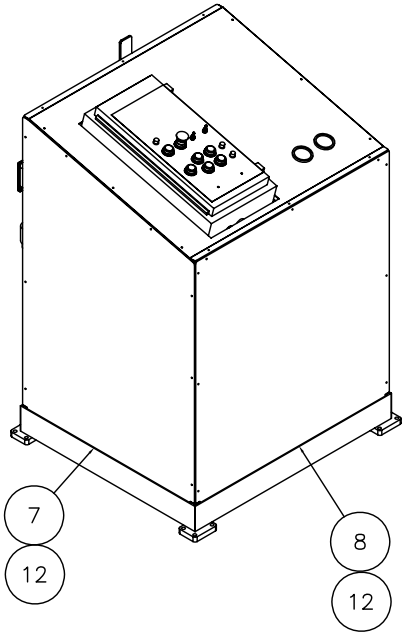

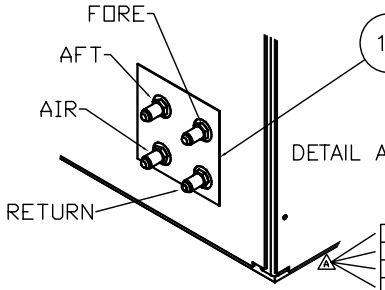

ITEM	NAME	DESCRIPTION	QTY
22	600-710-004	Washer, Flat, 1/4	8
21	600-690-005	Nut, Nylon Lock, 1/4-20 NC	4
20	600-640-013	Bolt, Hex Head, 1/4-20 NC x 3/4 (GR5)	4
19	050-004-106	Hose Bracket, Console	2
18	600-600-001	Screw, Pan Head, #10-32 NF x 1/2 Lg	4
17	601-160-025	Junction Box, 4 x 8 x 2.75	1
16	601-800-306	Decal, Rear Console Ports	1
15	601-450-010	1/4 NPT Pipe Plug	1
14	601-420-040	Straight, Bulkhead, #6 JIC (All)	1
13	601-420-015	Elbow, 90 Deg, Bulkhead, #6 JIC	3
12	600-600-032	Screw, #10-16 x 3/4, Self Tap, Slotted Hex Head	25
11	050-004-035	Tubing Assembly, 1/2" x 15 1/2	1
10	050-004-022A	Tubing Assembly, 1/2" x 24 7/8	1
9	033-002-063	TR-33 Gauge Assembly	2
8	ZZ1070-P-019	Front Cover, Console	1
7	ZZ1070-P-018	Side Cover, Console	2
6	ZZ1070-A-013	Hose Assy, 1/4 x 42"	1
5	ZZ1070-A-012	Hose Assy, 1/4 x 20"	2
4	ZZ1070-A-011	Hose Assy, 1/4 x 24"	1
3	ZZ1070-A-010	Hose Assy, 3/8 x 26"	2
2	ZZ1070-A-009	Air Valve Assy	1
1	ZZ1070-A-007	Console Sub-Assy	1

Parts List

NOTICE OF CONFIDENTIAL INFORMATION

INFORMATION CONTAINED HEREIN IS CONFIDENTIAL AND PROPERTY OF MOHAWK RESOURCES LTD., WHERE DRAWING IS FURNISHED TO OTHERS IT SHALL BE USED SOLELY FOR PURPOSES OF INSPECTION, INSTALLATION, OR MAINTENANCE. THE INFORMATION SHALL NOT BE USED OR DISCLOSED BY THE RECIPIENT FOR ANY OTHER PURPOSES WHATSOEVER.

NOTES:
1. REMOVE ALL SHARP CORNERS & EDGES.
2. UNLESS OTHERWISE SPECIFIED, SURFACE FINISH TO BE 125 RMS.
3. WELDING MEDIUM SHALL CONFORM TO AWS SPECIFICATIONS TO E-70XX ELECTRODES OR E-70TI CODE 5.3 FLUX CORE WIRE ONLY.

TOLERANCES:
ANGULAR ± 1°
FRACTIONAL ± .030
DECIMAL:
0.XX ± .030
0.XXX ± .005

FILE NAME ZZ1070-A-008

NEXT ASSEMBLY

SCALE	DRAWN	MOHAWK RESOURCES LTD.
1/4	rwv7089	
CHECKED	APPROVED	TITLE Console Assembly
DATE 9/25/07	WEIGHT 1250 LB.	FROM n/a
DRAWING NUMBER ZZ1070-A-008		B

D-SIZE

#	DESCRIPTION	DATE	APPROVED
A	Views Updated Item 7 was 600-600-027	06/27/2008	rwv7089

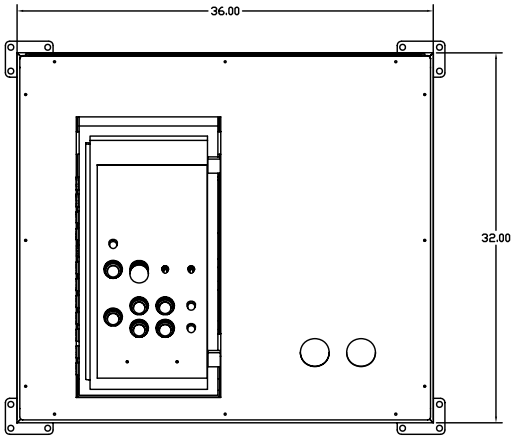

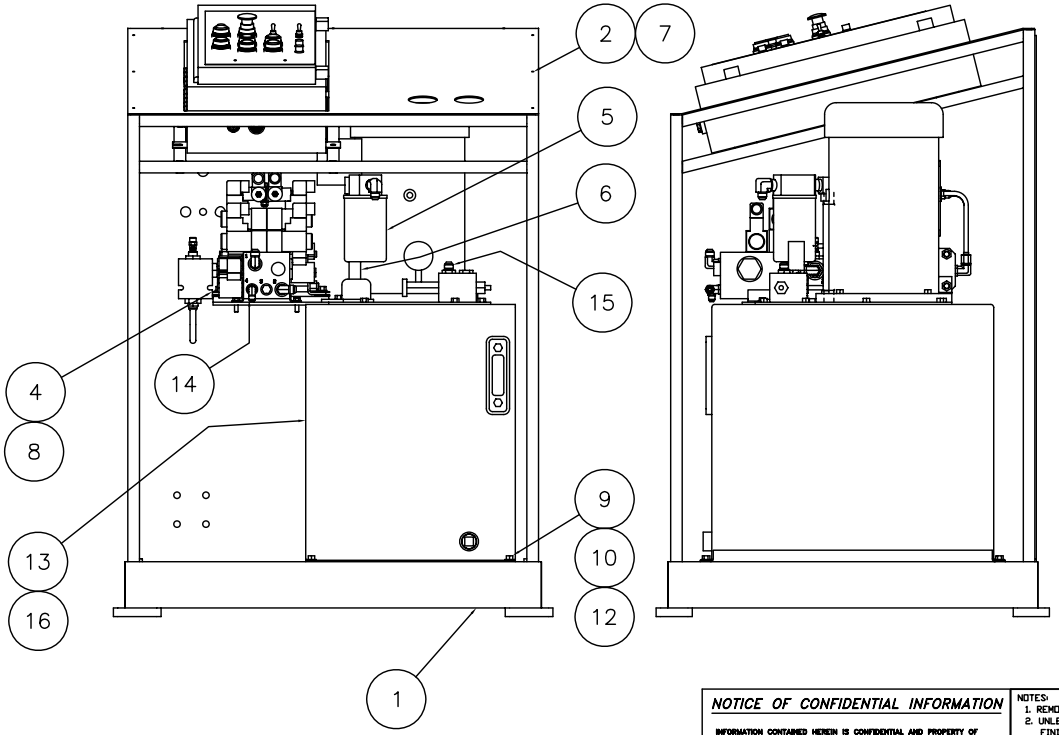

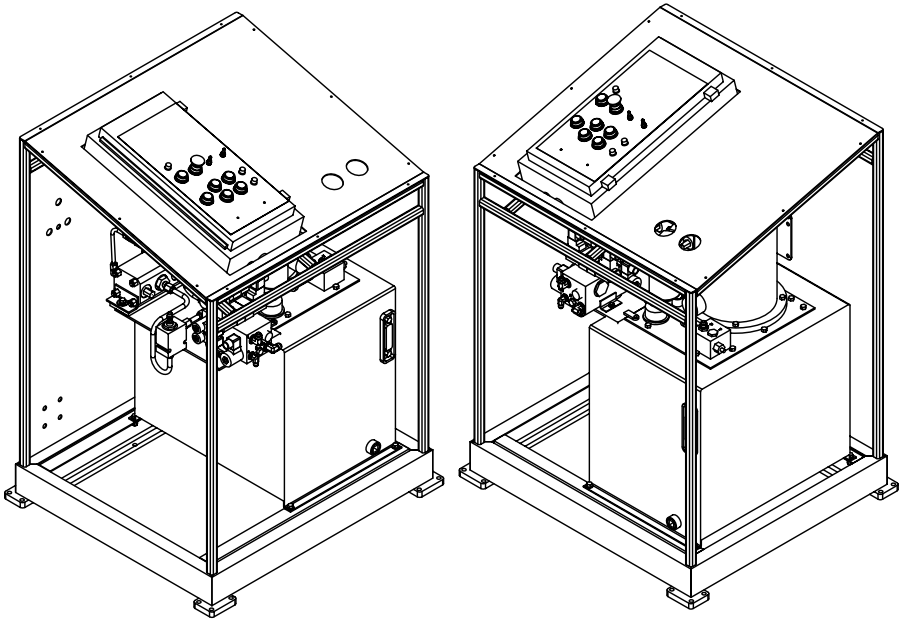

ITEM	NAME	DESCRIPTION	QTY
18	601-610-007	Hydraulic Fluid Additive (.217 oz)	1
17	601-610-006	Tamper-Proof Sealant (.125 oz)	1
16	601-610-001	Fluid, Hydraulic, Dexron III (Gallons)	30
15	601-420-037	Straight, #8 ORB to #8 JIC	1
14	601-420-017	Elbow, 90 Deg, #6 ORB to #6 JIC	1
13	601-300-015	Power Unit, TR-75	1
12	600-710-009	Washer, Flat, 3/8	4
11	600-710-003	Washer, Flat, 5/16	4
10	600-690-014	Nut, Nylon Lock, 3/8-16 NC	4
9	600-640-071	Bolt, Hex Head, 3/8-16 NC x 1" (GR5)	4
8	600-640-017	Bolt, Head Head Cap, 5/16-18NC x 1 1/4 Lg	4
7	600-600-032	Screw, #10x3/4, Self Tapping, Slotted Hex Head	9
6	050-004-114	Nipple, Pipe, 3/4 Dia x 9 1/2" Long	1
5	033-002-064	Filter Assembly	1
4	033-002-043	Manifold Assy, TR-33/35/50/75	1
3	ZZ1070-A-014	Electrical Enclosure Assy, TR-SERIES	1
2	ZZ1070-P-020	Top Cover, Console	1
1	ZZ1070-W-006	Console Weldment	1

Parts List

NOTICE OF CONFIDENTIAL INFORMATION

INFORMATION CONTAINED HEREIN IS CONFIDENTIAL AND PROPERTY OF MOHAWK RESOURCES LTD., WHERE DRAWING IS FURNISHED TO OTHERS IT SHALL BE USED SOLELY FOR PURPOSES OF INSPECTION, INSTALLATION, OR MAINTENANCE. THE INFORMATION SHALL NOT BE USED OR DISCLOSED BY THE RECIPIENT FOR ANY OTHER PURPOSES WHATSOEVER.

NOTES:
1. REMOVE ALL SHARP CORNERS & EDGES.
2. UNLESS OTHERWISE SPECIFIED, SURFACE FINISH TO BE 125 RMS.
3. WELDING MEDIUM SHALL CONFORM TO AWS SPECIFICATIONS TO E-70XX ELECTRODES OR E-70T1 CODE 5.3 FLUX CORE WIRE ONLY.

TOLERANCES:
ANGULAR ± 1°
FRACTIONAL ± .030
DECIMAL:
0.XX ± .030
0.XXX ± .005

FILE NAME: ZZ1070-A-007

ZZ1070-A-008
NEXT ASSEMBLY

SCALE	DRAWN	MOHAWK RESOURCES LTD.
1/4	rwb7089	
CHECKED	APPROVED	TITLE: Console Sub-Assy
DATE: 9/25/07	WEIGHT: 1100 LB.	FROM: n/a
DRAWING NUMBER: ZZ1070-A-007		

D-SIZE

#	DESCRIPTION	DATE	APPROVED
A	ITEM 11 AND 12 WERE QTY 1	06/27/2008	rwv7089

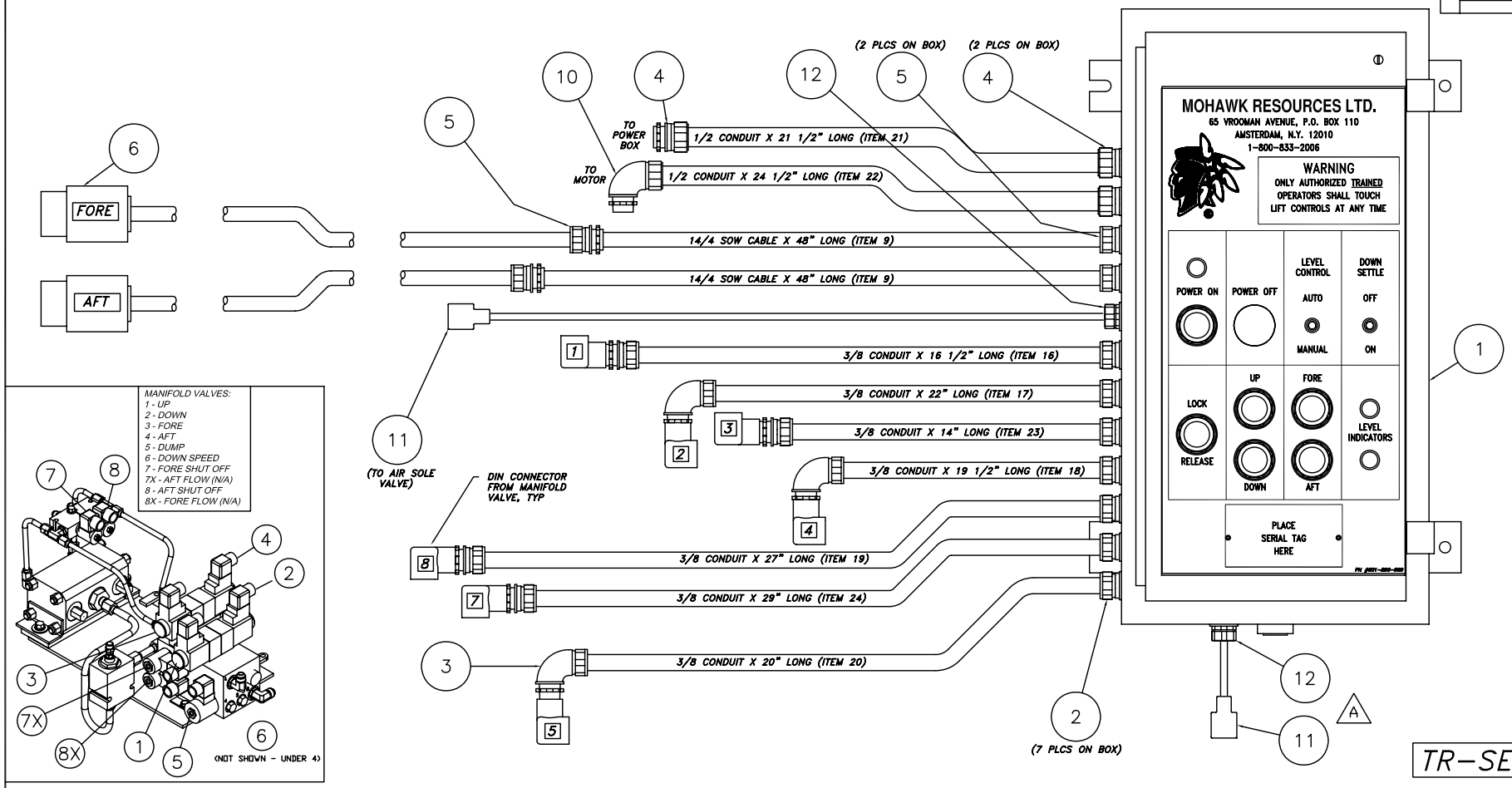

ITEM	NAME	DESCRIPTION	QTY	ITEM	NAME	DESCRIPTION	QTY	ITEM	NAME	DESCRIPTION	QTY
24	ZZ1070-P-460	Conduit, Liquid Tight, 3/8" x 29" Long	1	16	ZZ1070-P-452	Conduit, Liquid Tight, 3/8" x 16 1/2" Long	1	8			0
23	ZZ1070-P-453	Conduit, Liquid Tight, 3/8" x 14" Long	1	15	601-150-031	Wire, THHN, 14 Gauge (Qty in Feet) Green	37	7			0
22	ZZ1070-P-458	Conduit, Liquid Tight, 1/2" x 24 1/2" Long	1	14	601-150-030	Wire, THHN, 14 Gauge (Qty in Feet) White	37	6	601-170-008	Plug, 4-Wire, Locking, Female	2
21	ZZ1070-P-457	Conduit, Liquid Tight, 1/2" x 21 1/2" Long	1	13	601-150-029	Wire, THHN, 14 Gauge (Qty in Feet) Red	83	5	601-140-046	Connector, 1/2 NPT, 1/2"-5/8" Cable (Brown)	4
20	033-002-456	Conduit, Liquid Tight, 3/8" x 20" Long	1	12	601-165-053	Straight Adapter, Red	2	4	601-140-049	Fitting, Conduit, Str, 1/2", Liquid Tight	3
19	ZZ1070-P-455	Conduit, Liquid Tight, 3/8" x 27" Long	1	11	601-160-117	Din Connector w/36" Cable	2	3	601-140-024	Fitting, 3/8" Conduit, 90 Degree	3
18	ZZ1070-P-454	Conduit, Liquid Tight, 3/8" x 19 1/2" Long	1	10	601-140-050	Fitting, 1/2" Conduit, 90 Degree	1	2	601-140-056	Fitting, Conduit, Str, 3/8, Liquid Tight	11
17	ZZ1070-P-459	Conduit, Liquid Tight, 3/8" x 22" Long	1	9	033-002-459	Conductor, SOW-A/SO, 14/4 x 48" Long	2	1	ZZ1070-A-015	Electrical Enclosure Sub-Assy, TR-Series	1

Parts List

NOTICE OF CONFIDENTIAL INFORMATION

INFORMATION CONTAINED HEREIN IS CONFIDENTIAL AND PROPERTY OF MOHAWK RESOURCES LTD., WHERE DRAWING IS FURNISHED TO OTHERS IT SHALL BE USED SOLELY FOR PURPOSES OF INSPECTION, INSTALLATION, OR MAINTENANCE. THE INFORMATION SHALL NOT BE USED OR DISCLOSED BY THE RECIPIENT FOR ANY OTHER PURPOSES WHATSOEVER.

NOTES:
1. REMOVE ALL SHARP CORNERS & EDGES.
2. UNLESS OTHERWISE SPECIFIED, SURFACE FINISH TO BE 125 RMS.
3. WELDING MEDIUM SHALL CONFORM TO AWS SPECIFICATIONS TO E-70XX ELECTRODES OR E-70T1 CODE 5.3 FLUX CORE WIRE ONLY.

TOLERANCES:
ANGULAR ± 1°
FRACTIONAL ± .030
DECIMAL:
0.XX ± .030
0.XXX ± .005

FILE NAME ZZ1070-A-014

ZZ1070-A-007
NEXT ASSEMBLY

SCALE	DRAWN	MOHAWK RESOURCES LTD.
1/4	rwv7089	
CHECKED	APPROVED	TITLE TR-33/35/50/75 - 2008 Electrical Enclosure Assy
DATE 10/1/07	WEIGHT 50 LB.	FROM n/a
		DRAWING NUMBER ZZ1070-A-014

D-SIZE

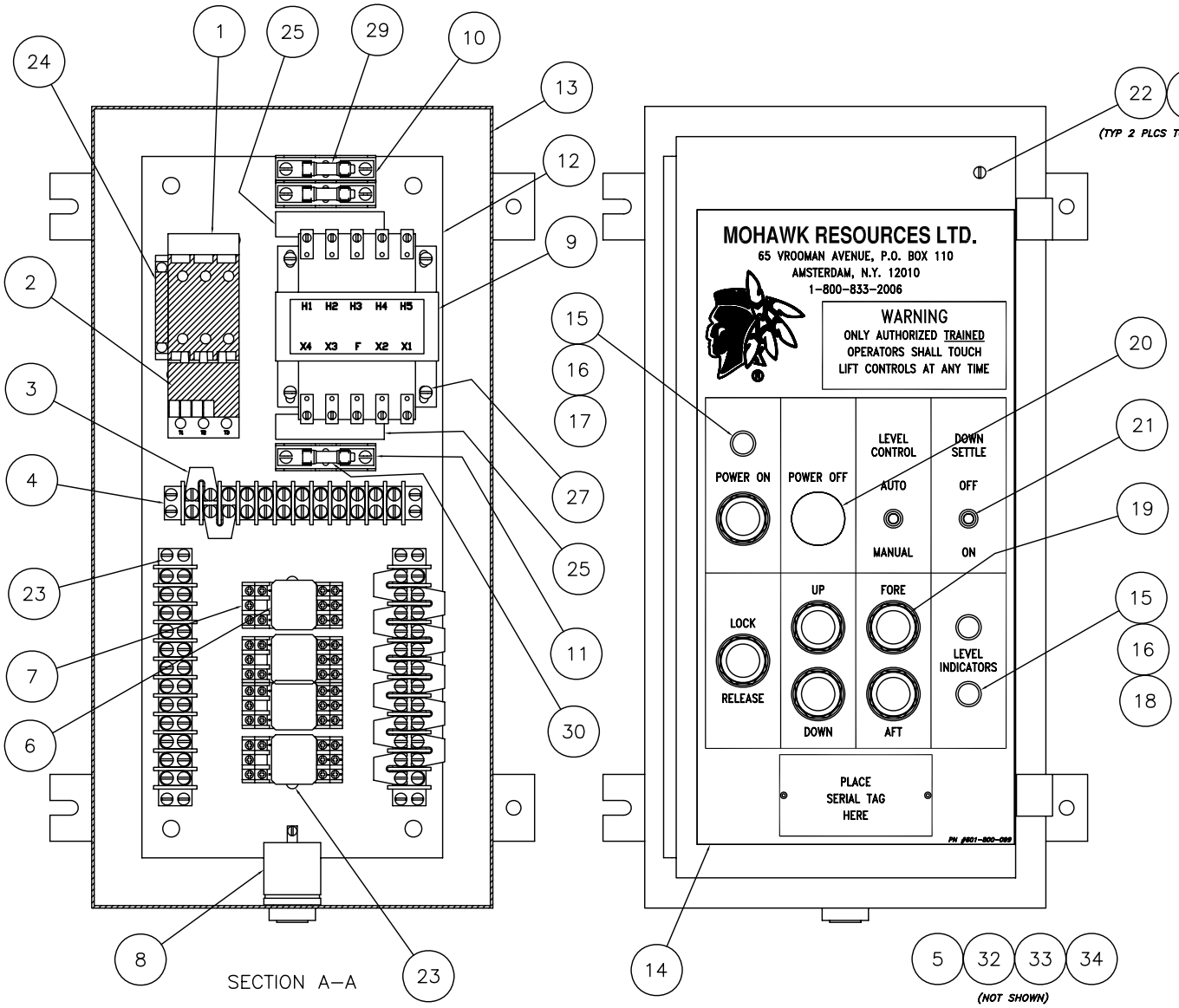

ITEM	NAME	DESCRIPTION	QTY
34	601–600–045	Cable Tie Holder, #8	2
33	601–600–059	Cable Tie Holder, (Small White)	8
32	601–600–051	Plastic Wire Tie, White, 5 3/8" Lg	25
31	600–710–004	Washer, Flat, 1/4	4
30	601–120–047	Fuse, Class CC, KLDR, 3 2/10 A, 600 V	1
29	601–120–044	Fuse, Class CC, KLDR, 1 6/10 A, 600 V	2
28	600–680–013	Nut, Plain, #10–32 NF	2
27	600–600–013	Screw, #10–32 x 1/4", Slotted Round Head, Machine	8
26			0
25	601–800–124	Decal, "CAUTION – For Protection...Replace With...Fuse"	2
24	601–100–087	IEC Auxiliary Contact, Side Mount, 2 X NO	1
23	600–600–006	Screw, Slotted Round Head, #10–32 NF x 1/2 Lg	15
22	600–600–005	Screw, Slotted Round Head, #10–32 NF x 1	2
21	601–110–045	Switch, Toggle, Momentary, DPDT, 25 Amp	2
20	601–110–033	Push Button, Red Mushroom, NEMA 4X	1
19	601–110–010	Push Button, Green, NEMA 4X	6
18	601–160–048	Flat Lense, Red	2
17	601–160–090	Flat Lense, Green	1
16	601–160–047	Miniture Lamp, Slide Base, 120 V	3
15	601–160–046	Lamp Socket, 11/16 Dia Hole	3
14	601–800–099	TR–33 Control Panel Decal	1
13	033–002–113	Enclosure Drilling, TR–33, 24 x 12 x 6	1
12	033–002–114	Enclosure Panel	1
11	601–120–074	Fuse Block, Single, Midget	1
10	601–120–073	Fuse Block, Double, Class CC	1
9	601–160–043	Transformer, 250 VA	1
8	601–160–002	Sonalert Solid State Signal, 110 VAC	1
7	601–160–017	Relay Socket 15A 11Pin Square	4
6	601–160–035	Relay, Control, 3PDT (120 VAC Coil)	4
5	033–002–039	Cable Assy	1
4	601–160–021	Terminal Block, 12 Pole	3
3	601–160–022	Terminal Block Jumper	13
2	601–120–087	Overload Relay, 40–50 Amp	1
1	601–100–066	Contactor, 120 VAC Coil, Rated (10HP/230V/3PH)/(5HP/230V/1PH)	1

Parts List

NOTE: SEE 033–002–093 FOR OVERLOAD SETTING.
SHOWN FOR 208–230 VAC (STANDARD)

D-SIZE

NOTICE OF CONFIDENTIAL INFORMATION

INFORMATION CONTAINED HEREIN IS CONFIDENTIAL AND PROPERTY OF MOHAWK RESOURCES LTD., WHERE DRAWING IS FURNISHED TO OTHERS IT SHALL BE USED SOLELY FOR PURPOSES OF INSPECTION, INSTALLATION, OR MAINTENANCE. THE INFORMATION SHALL NOT BE USED OR DISCLOSED BY THE RECIPIENT FOR ANY OTHER PURPOSES WHATSOEVER.

NOTES:
1. REMOVE ALL SHARP CORNERS & EDGES.
2. UNLESS OTHERWISE SPECIFIED, SURFACE FINISH TO BE 125 RMS.
3. WELDING MEDIUM SHALL CONFORM TO AWS SPECIFICATIONS TO E-70XX ELECTRODES OR E-70T1 CODE 5.3 FLUX CORE WIRE ONLY.

TOLERANCES:
ANGULAR ± 1°
FRACTIONAL ± .030
DECIMAL:
0.XX ± .030
0.XXX ± .005

FILE NAME ZZ1070–A–015

ZZ1070–A–104
NEXT ASSEMBLY

SCALE 5/8	DRAWN rwv7089	MOHAWK RESOURCES LTD.	
CHECKED	APPROVED	TITLE TR–Series Elec Enclosure Sub–Assy	
DATE 10/10/07	WEIGHT 50 LB.	FROM n/a	DRAWING NUMBER ZZ1070–A–015

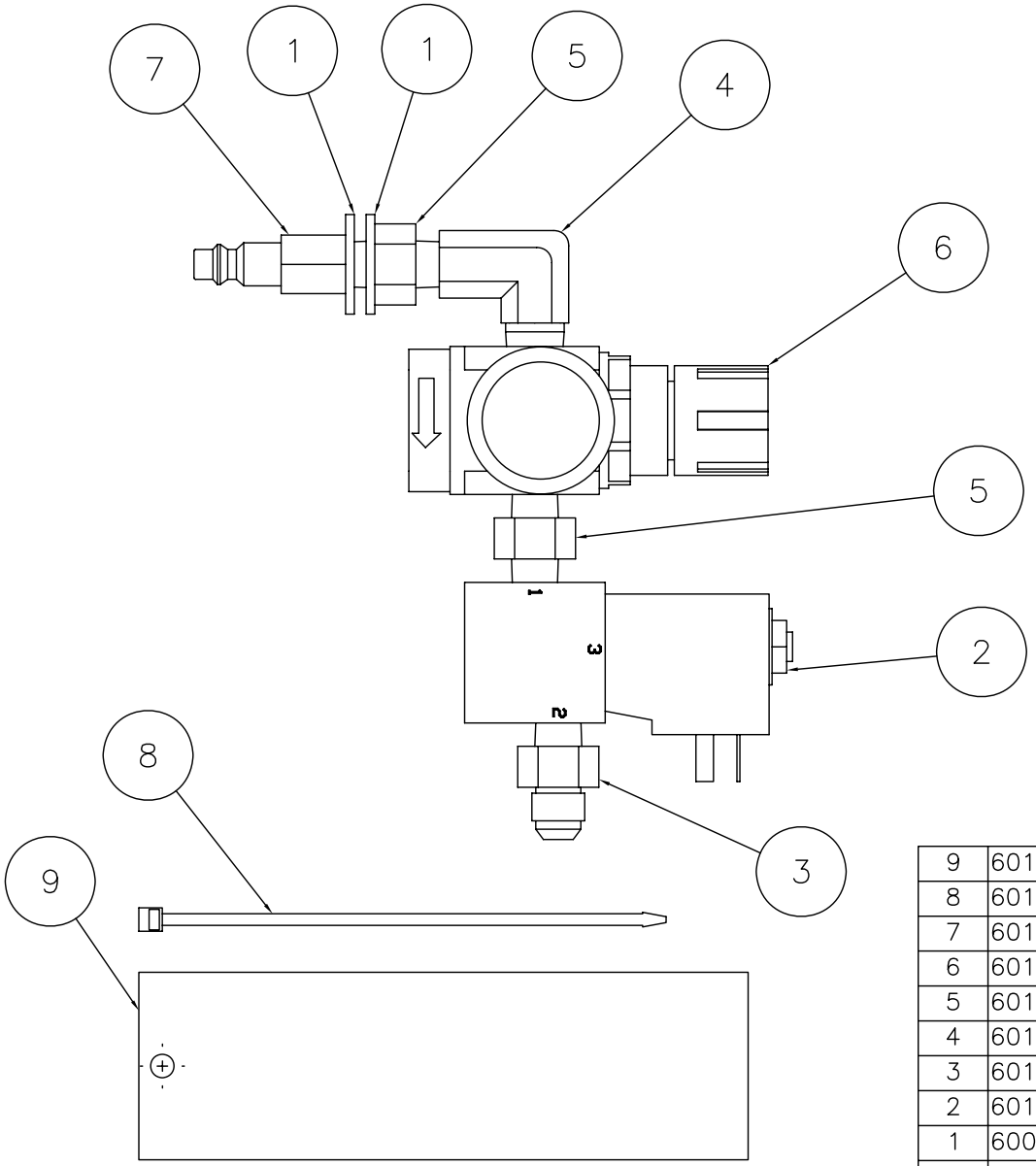

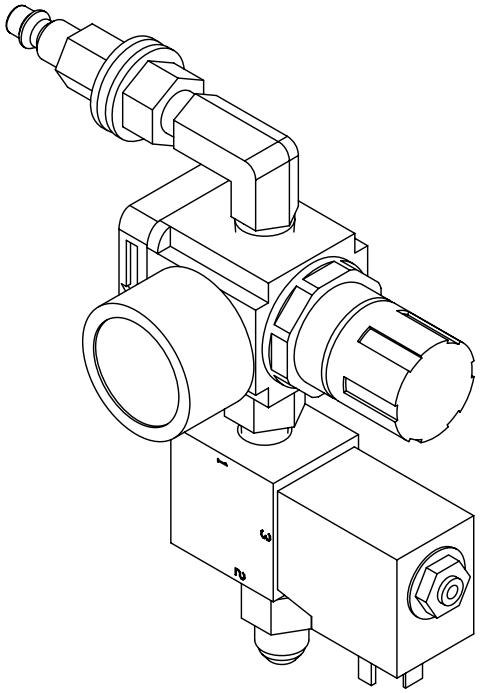

(LABEL TO BE WIRE TIED TO REGULATOR)

ITEM	NAME	DESCRIPTION	QTY
9	601–800–118	Decal, "Warning: Air Pressure..."	1
8	601–600–051	Plastic Wire Tie, White, 5 3/8" Lg	1
7	601–530–035	Air Coupler Plug Type	1
6	601–510–026	Regulator With Gauge	1
5	601–420–106	Straight, 1/4 Male Pipe to 1/4 Male Pipe	2
4	601–420–090	Elbow, 90 Deg, 1/4 FNPT to 1/4 MNPT	1
3	601–420–031	Fitting, Straight, 1/4 NPTM to –6 JIC Male	1
2	601–410–060	Solenoid Air Valve, 120 VAC, 1/4 NPT Ports	1
1	600–710–015	Washer, Flat (SAE) 1/2	2

Parts List

C-SIZE

NOTICE OF CONFIDENTIAL INFORMATION

INFORMATION CONTAINED HEREIN IS CONFIDENTIAL AND PROPERTY OF MOHAWK RESOURCES LTD.. WHERE DRAWING IS FURNISHED TO OTHERS IT SHALL BE USED SOLELY FOR PURPOSES OF INSPECTION, INSTALLATION, OR MAINTENANCE. THE INFORMATION SHALL NOT BE USED OR DISCLOSED BY THE RECIPIENT FOR ANY OTHER PURPOSES WHATSOEVER.

NOTES:
1. REMOVE ALL SHARP CORNERS & EDGES.
2. UNLESS OTHERWISE SPECIFIED, SURFACE FINISH TO BE 125 RMS.
3. WELDING MEDIUM SHALL CONFORM TO AWS SPECIFICATIONS TO E-70XX ELECTRODES OR E-70TI CODE 5.3 FLUX CORE WIRE ONLY.

TOLERANCES:
ANGULAR ± 1°
FRACTIONAL ± .030
DECIMAL:
0.XX ± .030
0.XXX ± .005

FILE NAME ZZ1070–A–009

ZZ1070–A–008
NEXT ASSEMBLY

SCALE	DRAWN	MOHAWK RESOURCES LTD.	
1=1	rwv7089		
CHECKED	APPROVED	TITLE Air Valve Assy	
DATE 9/26/07	WEIGHT 2 LB.	FROM n/a	DRAWING NUMBER ZZ1070–A–009

#	DESCRIPTION	DATE	APPROVED
C	Redrawn & Replace in 3D Dual Pilot Check Replaced by Poppet Valves	10/17/2002	rwv7089
D	1) 601-420-124, 033-002-078, 033-002-079 REMOVED	01/20/2003	dak0879
	2) 601-420-022, 601-420-144, 033-002-430 ADDED	01/20/2003	dak0879
E	DRAWING REVISED & REDRAWN	07/19/2004	dak0879
F	600-640-037, 600-690-001, AND 600-710-003 ADDED	04/21/2005	dak0879
G	Item 13 (ZZ1070-A-022) & Item 14 (033-002-065) Added.	06/27/2008	rwv7089
	Item 4 (601-410-024), 5 (601-420-022) & Item 9 (601-420-144) Removed.	06/27/2008	rwv7089

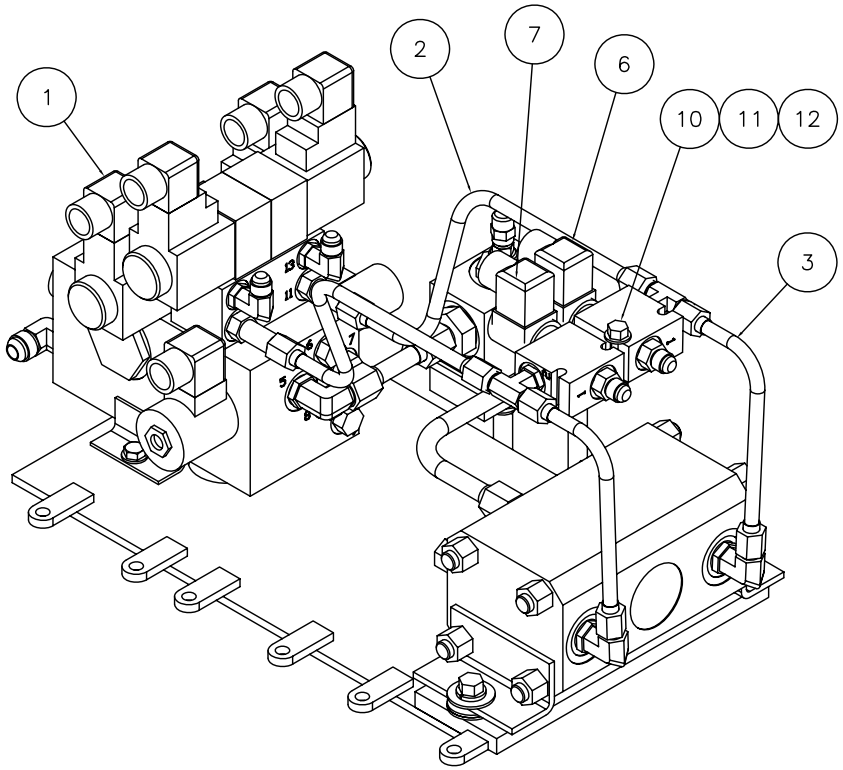

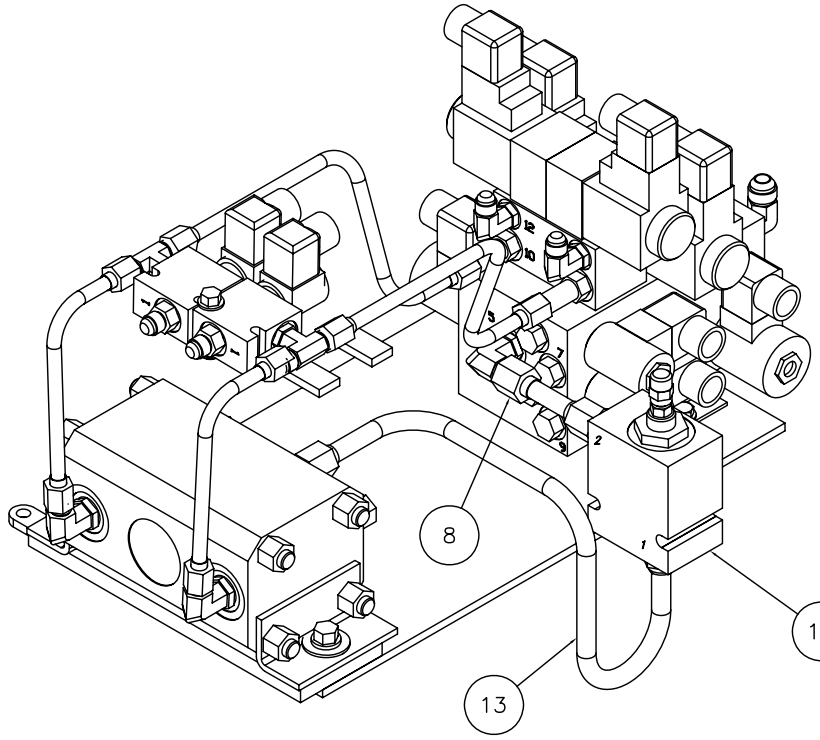

FULLY CLOSE VALVE (CW), THEN BACK OFF (CCW) THREE (3) TURNS USING 3/16 ALLEN WRENCH, THEN TIGHTED CAP.

ITEM	NAME	DESCRIPTION	QTY
14	033-002-065	PCFC Valve Assy	1
13	ZZ1070-A-022	Tubing Assembly, 1/2" x 21" CTL	1
12	600-710-003	Washer, Flat, 5/16	2
11	600-690-001	Nut, Nylon Lock, 5/16-18 NC	1
10	600-640-037	Bolt, Hex Head, 5/16-18 NC x 1 3/4 (GR8)	1
8	033-002-038	Tubing Assembly, 1/2" x 2 1/2"	1
7	033-002-062	Poppet Solenoid Assembly	1
6	033-002-062	Poppet Solenoid Assembly	1
3	050-004-040	Tubing Assembly, 3/8 x 7 3/4	2
2	050-004-015	Tubing Assembly, 3/8 x 12 1/2	2
1	033-002-042	Valve & Mounting Base Sub-Assy	1

F REF
F REF
F

Parts List

2008

TR-33/35/50/75

D-SIZE

NOTICE OF CONFIDENTIAL INFORMATION

INFORMATION CONTAINED HEREIN IS CONFIDENTIAL AND PROPERTY OF MOHAWK RESOURCES LTD., WHERE DRAWING IS FURNISHED TO OTHERS IT SHALL BE USED SOLELY FOR PURPOSES OF INSPECTION, INSTALLATION, OR MAINTENANCE. THE INFORMATION SHALL NOT BE USED OR DISCLOSED BY THE RECIPIENT FOR ANY OTHER PURPOSES WHATSOEVER.

NOTES:
1. REMOVE ALL SHARP CORNERS & EDGES.
2. UNLESS OTHERWISE SPECIFIED, SURFACE FINISH TO BE 125 RMS.
3. WELDING MEDIUM SHALL CONFORM TO AWS SPECIFICATIONS TO E-70XX ELECTRODES OR E-70T1 CODE 5.3 FLUX CORE WIRE ONLY.

TOLERANCES:
ANGULAR ± 1°
FRACTIONAL ± .030
DECIMAL:
0.XX ± .030
0.XXX ± .005

FILE NAME 033-002-043

033-002-044

NEXT ASSEMBLY

SCALE 1'0"=1'0"
CHECKED
DATE 10/21/02

DRAWN dak
APPROVED
WEIGHT 65 LB.

MOHAWK RESOURCES LTD.

TITLE TR-33/35/50/75 - 2008 Manifold Assembly

FROM n/a

DRAWING NUMBER 033-002-043

G

#	DESCRIPTION	DATE	APPROVED
C	1) REVISED & REDRAWN IN 3D 2) PORTS #6-9 HAD	10/18/2002	dak0879
	ITEM 9 FITTINGS	10/18/2002	dak0879
D	ITEM 16 WAS 601-420-043	01/20/2003	dak0879
E	DRAWING REVISED & REDRAWN	07/19/2004	dak0879
F	View Modified - Fitting was Straight	06/27/2008	rwv7089

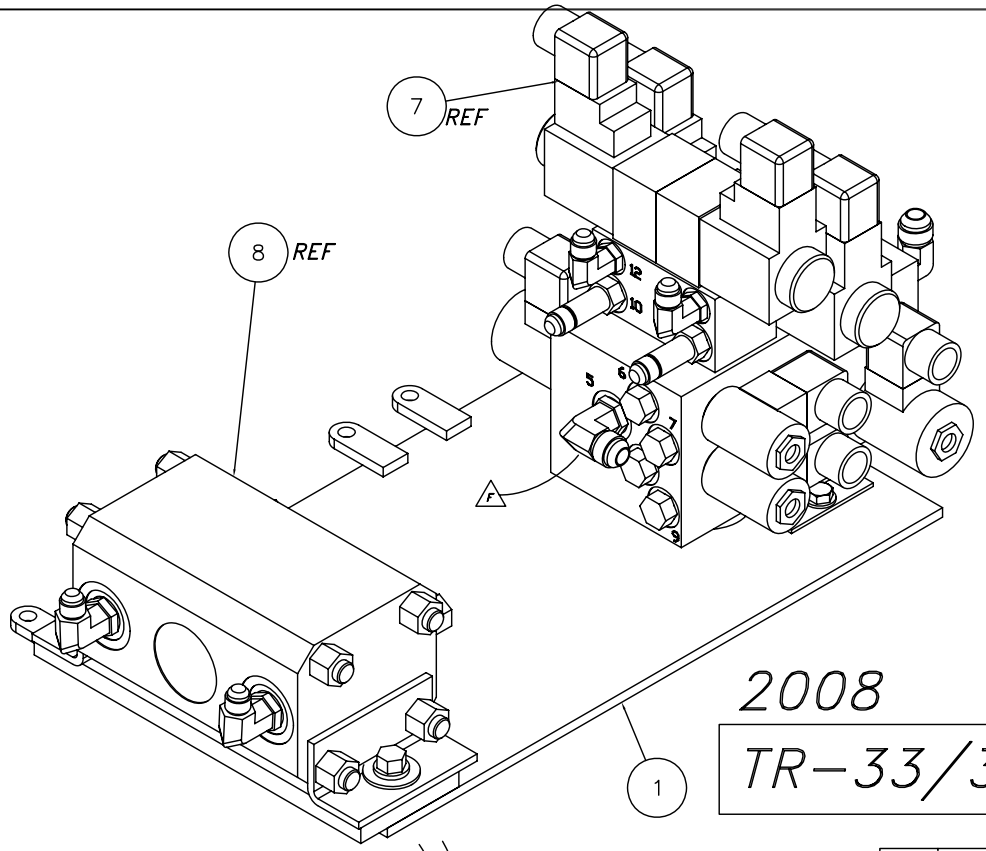

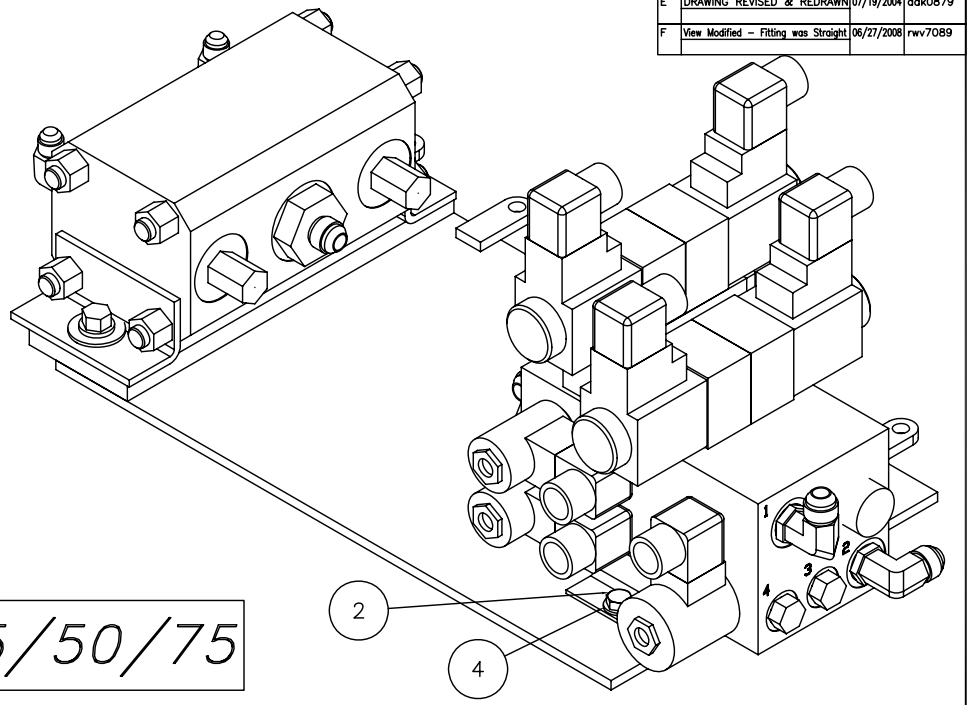

2008

TR-33/35/50/75

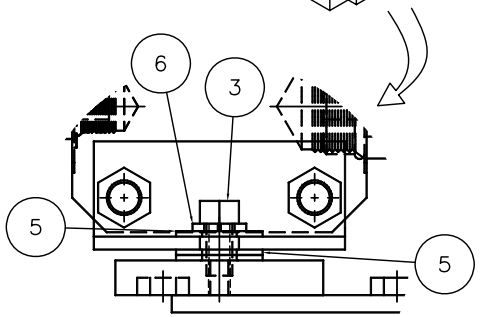

FLOW DIVIDER MOUNTING HARDWARE

ITEM	NAME	DESCRIPTION	QTY
REF	8	033-002-061	Flow Divider Assembly	1
REF	7	033-002-060	Tr-33 Manifold w/ Fittings Assembly	1
	6	600-720-004	LOCK WASHER, 7/16	2
	5	600-710-005	Washer, Flat, 7/16	6
	4	600-710-003	Washer, Flat, 5/16	2
	3	600-640-034	Bolt, Hex Head, 3/8-16 NC x 3/4 (GR8)	2
	2	600-640-001	Bolt, Hex Head, 5/16-18 NC x 1" Lg (Gr 5)	2
	1	050-004-027	Valve Mounting Base Assembly (Large Flow Divider)	1

Parts List

NOTICE OF CONFIDENTIAL INFORMATION

INFORMATION CONTAINED HEREIN IS CONFIDENTIAL AND PROPERTY OF MOHAWK RESOURCES LTD., WHERE DRAWING IS FURNISHED TO OTHERS IT SHALL BE USED SOLELY FOR PURPOSES OF INSPECTION, INSTALLATION, OR MAINTENANCE; THE INFORMATION SHALL NOT BE USED OR DISCLOSED BY THE RECIPIENT FOR ANY OTHER PURPOSES WHATSOEVER.

NOTES:
1. REMOVE ALL SHARP CORNERS & EDGES.
2. UNLESS OTHERWISE SPECIFIED, SURFACE FINISH TO BE 125 RMS.
3. WELDING MEDIUM SHALL CONFORM TO AWS SPECIFICATIONS TO E-70XX ELECTRODES OR E-70T1 CODE 5.3 FLUX CORE WIRE ONLY.

TOLERANCES:
ANGULAR ± 1°
FRACTIONAL ± .030
DECIMAL:
0.XX ± .030
0.XXX ± .005

FILE NAME 033-002-042

033-002-043

NEXT ASSEMBLY

SCALE	DRAWN	MOHAWK RESOURCES LTD.
CHECKED	APPROVED	TITLE (TR-33) Valve/Mounting Base Sub-Assy
DATE 10/2002	WEIGHT 55.3 LB.	FROM n/a	DRAWING NUMBER 033-002-042	F

D-SIZE

#	DESCRIPTION	DATE	APPROVED
B	ITEM 6 (601-420-) REPLACED BY ITEM 3 ITEM 3 QTY WAS 2.	06/27/2008	rwv7089

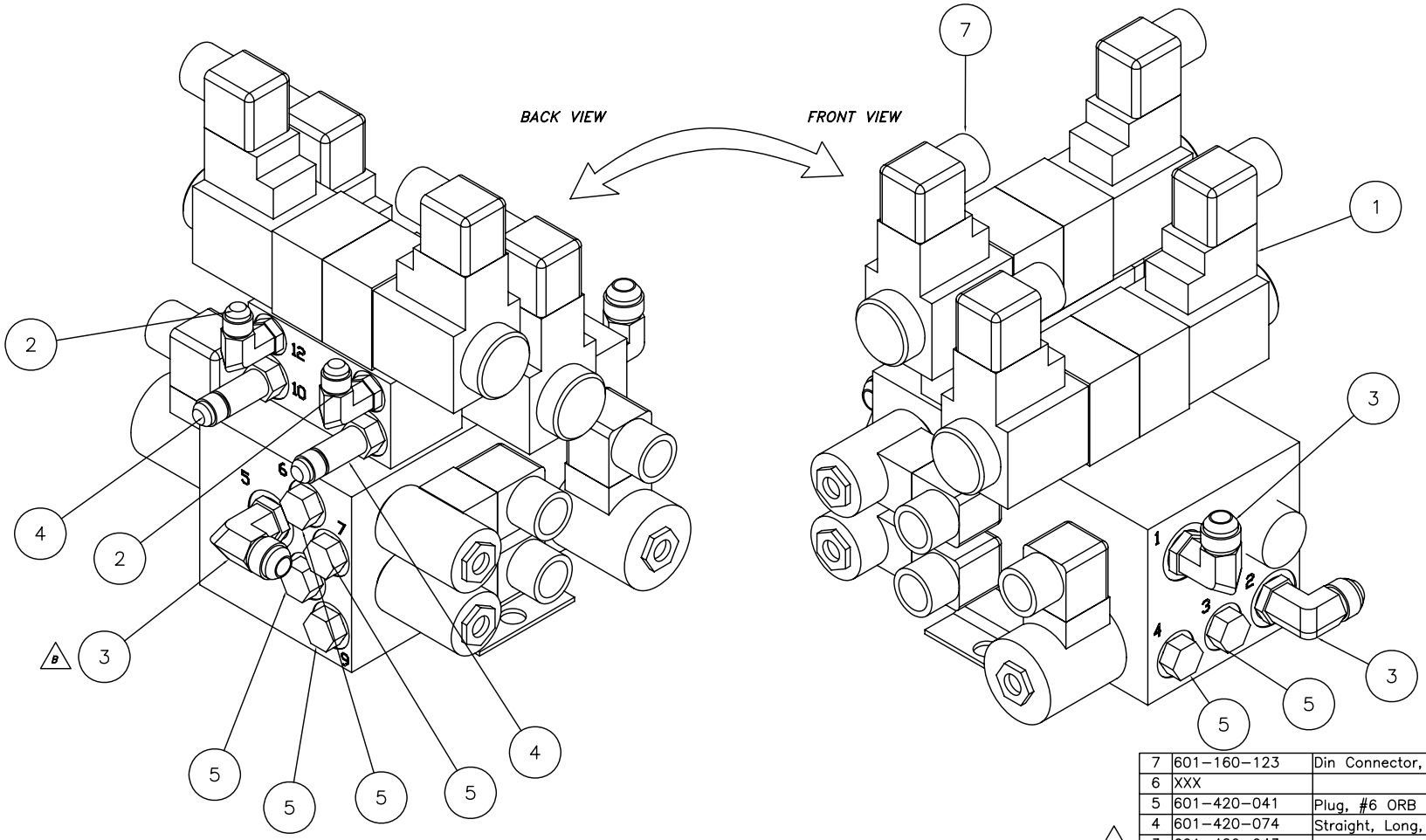

ITEM	NAME	DESCRIPTION	QTY
7	601-160-123	Din Connector, Lighted, 3 Pin	10
6	XXX		0
5	601-420-041	Plug, #6 ORB	6
4	601-420-074	Straight, Long, #6 ORB to #6 JIC	2
3	601-420-043	Elbow, 90 Deg, #8 ORB to #8 JIC	3
2	601-420-072	Elbow, 90 Deg, #4 ORB to #6 JIC	2
1	601-410-047	Manifold Valve w/ Down Flow Thru (TR33)	1

Parts List

2008

NOTE:
ALL FITTINGS TO BE ASSEMBLED, AS SHOWN.

TR-33/35/50/75

D-SIZE

NOTICE OF CONFIDENTIAL INFORMATION

INFORMATION CONTAINED HEREIN IS CONFIDENTIAL AND PROPERTY OF MOHAWK RESOURCES LTD.. WHERE DRAWING IS FURNISHED TO OTHERS IT SHALL BE USED SOLELY FOR PURPOSES OF INSPECTION, INSTALLATION, OR MAINTENANCE. THE INFORMATION SHALL NOT BE USED OR DISCLOSED BY THE RECIPIENT FOR ANY OTHER PURPOSES WHATSOEVER.

NOTES:
1. REMOVE ALL SHARP CORNERS & EDGES.
2. UNLESS OTHERWISE SPECIFIED, SURFACE FINISH TO BE 125 RMS.
3. WELDING MEDIUM SHALL CONFORM TO AWS SPECIFICATIONS TO E-70XX ELECTRODES OR E-70T1 CODE 5.3 FLUX CORE WIRE ONLY.

TOLERANCES:
ANGULAR ± 1°
FRACTIONAL ± .030
DECIMAL:
0.XX ± .030
0.XXX ± .005

FILE NAME 033-002-060

033-002-
NEXT ASSEMBLY

SCALE 1'0"=1'0"
DRAWN dak0879
CHECKED
APPROVED
DATE 07/16/2004
WEIGHT 24.58 LB.

MOHAWK RESOURCES LTD.

TITLE TR-33/35/50/75 - 2008 MANIFOLD W/ FITTINGS ASSEMBLY

FROM

DRAWING NUMBER 033-002-060

B

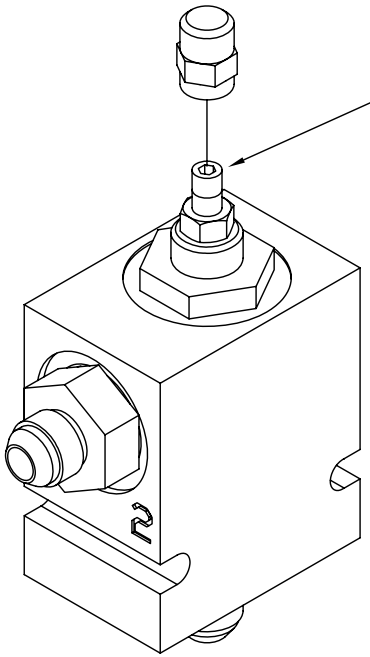

FULLY TIGHTEN (CW) WITH 3/16 ALLEN WRENCH, THEN BACK OFF (CCW) 3 FULL TURNS, THEN TIGHTEN JAM NUT, THEN TIGHTEN CAP.

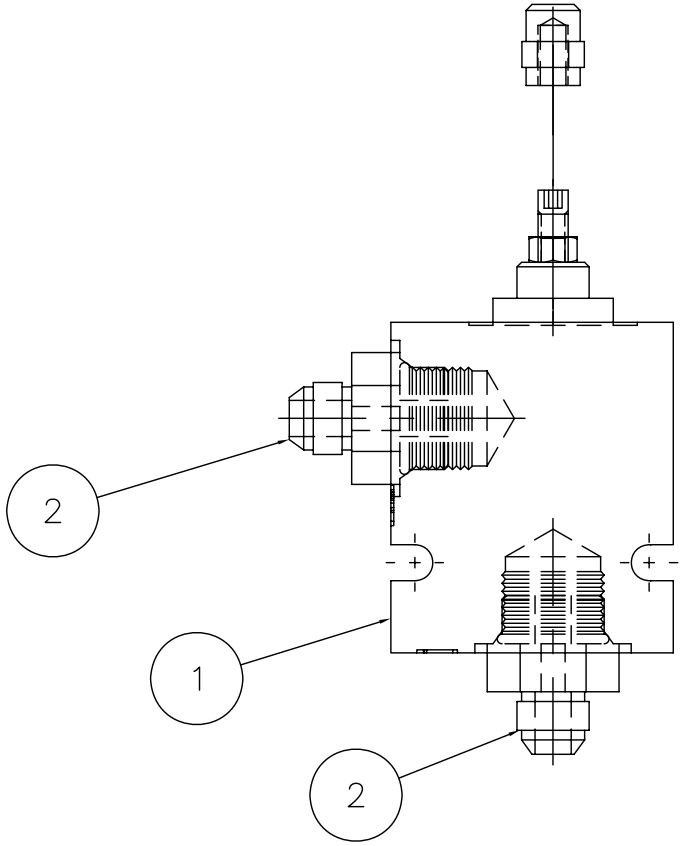

ITEM	NAME	DESCRIPTION	QTY
2	601-420-035	Fitting, Straight, #12 ORBM to #8 JICM	2
1	601-410-087	Pressure Compensated Flow Control Valve	1

Parts List

C-SIZE

NOTICE OF CONFIDENTIAL INFORMATION

INFORMATION CONTAINED HEREIN IS CONFIDENTIAL AND PROPERTY OF MOHAWK RESOURCES LTD.. WHERE DRAWING IS FURNISHED TO OTHERS IT SHALL BE USED SOLELY FOR PURPOSES OF INSPECTION, INSTALLATION, OR MAINTENANCE. THE INFORMATION SHALL NOT BE USED OR DISCLOSED BY THE RECIPIENT FOR ANY OTHER PURPOSES WHATSOEVER.

NOTES:
1. REMOVE ALL SHARP CORNERS & EDGES.
2. UNLESS OTHERWISE SPECIFIED, SURFACE FINISH TO BE 125 RMS.
3. WELDING MEDIUM SHALL CONFORM TO AWS SPECIFICATIONS TO E-70XX ELECTRODES OR E-70TI CODE 5.3 FLUX CORE WIRE ONLY.

TOLERANCES:
ANGULAR ± 1°
FRACTIONAL ± .030
DECIMAL:
0.XX ± .030
0.XXX ± .005

FILE NAME 033-002-065

033-002-043
033-002-058
NEXT ASSEMBLY

SCALE n/a | DRAWN rwv7089 | CHECKED | APPROVED | DATE 7/08 | WEIGHT 1.0 LB.

MOHAWK RESOURCES LTD.

TITLE TR-33/35/50/75 PCFC Valve Assy

FROM n/a | DRAWING NUMBER 033-002-065

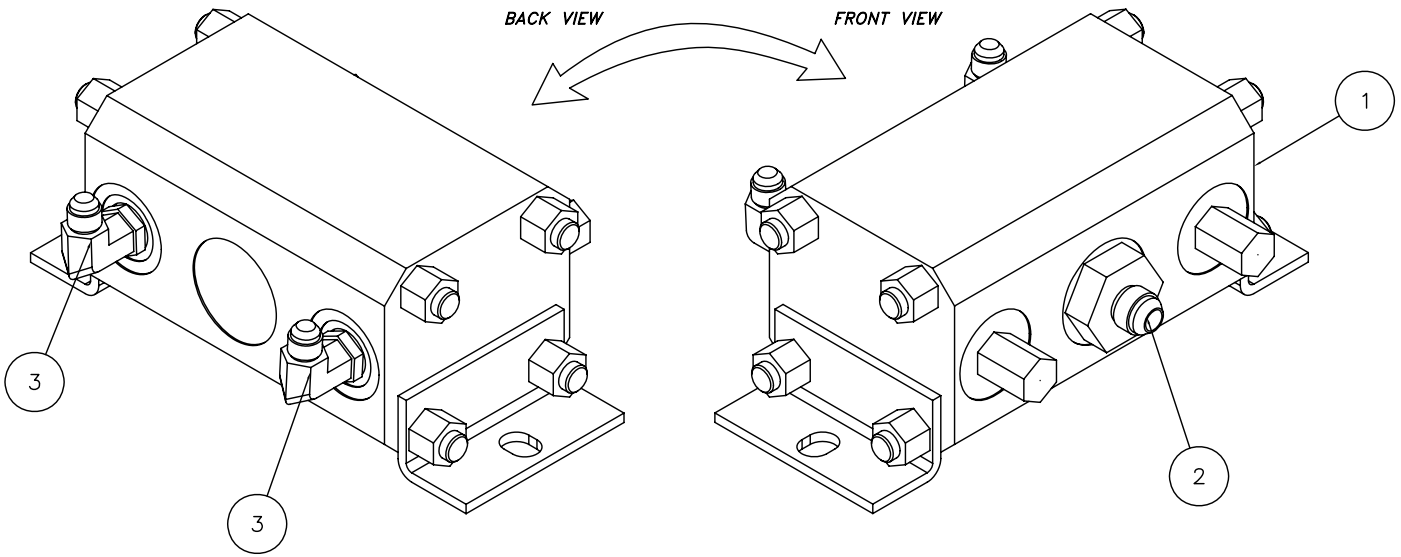

ITEM	NAME	DESCRIPTION	QTY
3	601-420-023	Elbow, 90 Deg, #8 ORB to #6 JIC	2
2	601-420-087	Straight, #16 ORB to #8 JIC	1
1	601-410-041	Flow Divider	1

Parts List

NOTE:
ALL FITTINGS TO BE ASSEMBLED, AS SHOWN.

NOTICE OF CONFIDENTIAL INFORMATION

INFORMATION CONTAINED HEREIN IS CONFIDENTIAL AND PROPERTY OF MOHAWK RESOURCES LTD., WHERE DRAWING IS FURNISHED TO OTHERS IT SHALL BE USED SOLELY FOR PURPOSES OF INSPECTION, INSTALLATION, OR MAINTENANCE. THE INFORMATION SHALL NOT BE USED OR DISCLOSED BY THE RECIPIENT FOR ANY OTHER PURPOSES WHATSOEVER.

NOTES:
1. REMOVE ALL SHARP CORNERS & EDGES.
2. UNLESS OTHERWISE SPECIFIED, SURFACE FINISH TO BE 125 RMS.
3. WELDING MEDIUM SHALL CONFORM TO AWS SPECIFICATIONS TO E-70XX ELECTRODES OR E-70TI CODE 5.3 FLUX CORE WIRE ONLY.

TOLERANCES:
ANGULAR ± 1°
FRACTIONAL ± .030
DECIMAL:
0.XX ± .030
0.XXX ± .005

FILE NAME 033-002-061

033-002-
NEXT ASSEMBLY

SCALE FULL
DRAWN dak0879
CHECKED
APPROVED
DATE 07/16/2004
WEIGHT 14.2 LB.

MOHAWK RESOURCES LTD.

TITLE FLOW DIVIDER ASSEMBLY

FROM

DRAWING NUMBER 033-002-061

D-SIZE

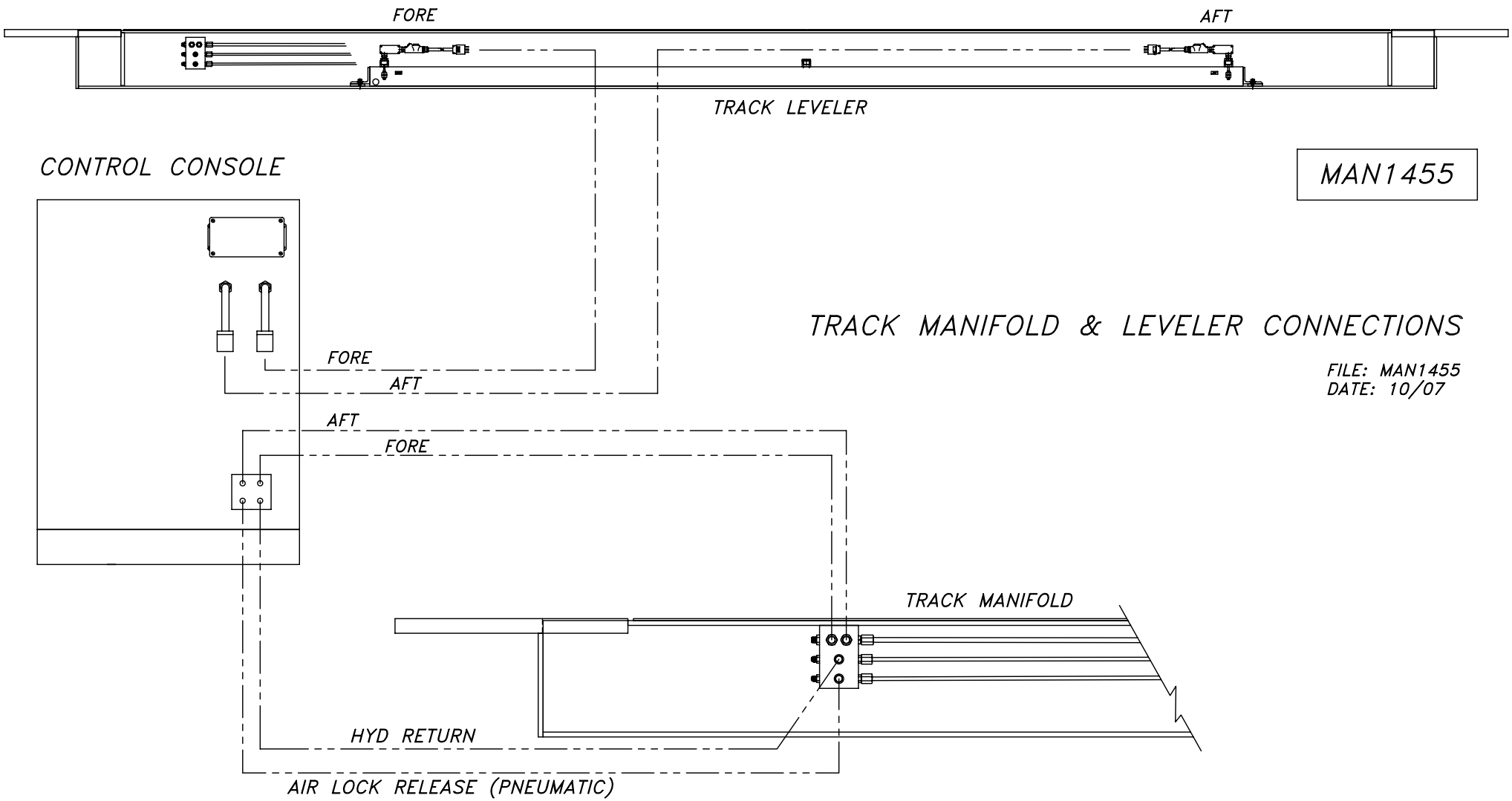
FORE
AFT
TRACK LEVELER
CONTROL CONSOLE
MAN1455
TRACK MANIFOLD & LEVELER CONNECTIONS
FILE: MAN1455
DATE: 10/07
FORE
AFT
AFT
FORE
TRACK MANIFOLD
HYD RETURN
AIR LOCK RELEASE (PNEUMATIC)

MOHAWK

MODELS
TR-33/ 35/ 50 / 75
TR-33WT/35WT/50WT/70WT
ELECTRICAL/HYDRAULIC
SCHEMATICS

MOHAWK LIFTS, LLC.
65 VROOMAN AVENUE
AMSTERDAM, NY 12010
TOLL FREE : 1-800-833-2006
FAX : 1-518-842-1289
LOCAL : 1-518-842-1431

REV.	DESCRIPTION	DATE	BY	APP'D.
A	ITEM 10 WAS 601-410-024	6/08	R.V.	

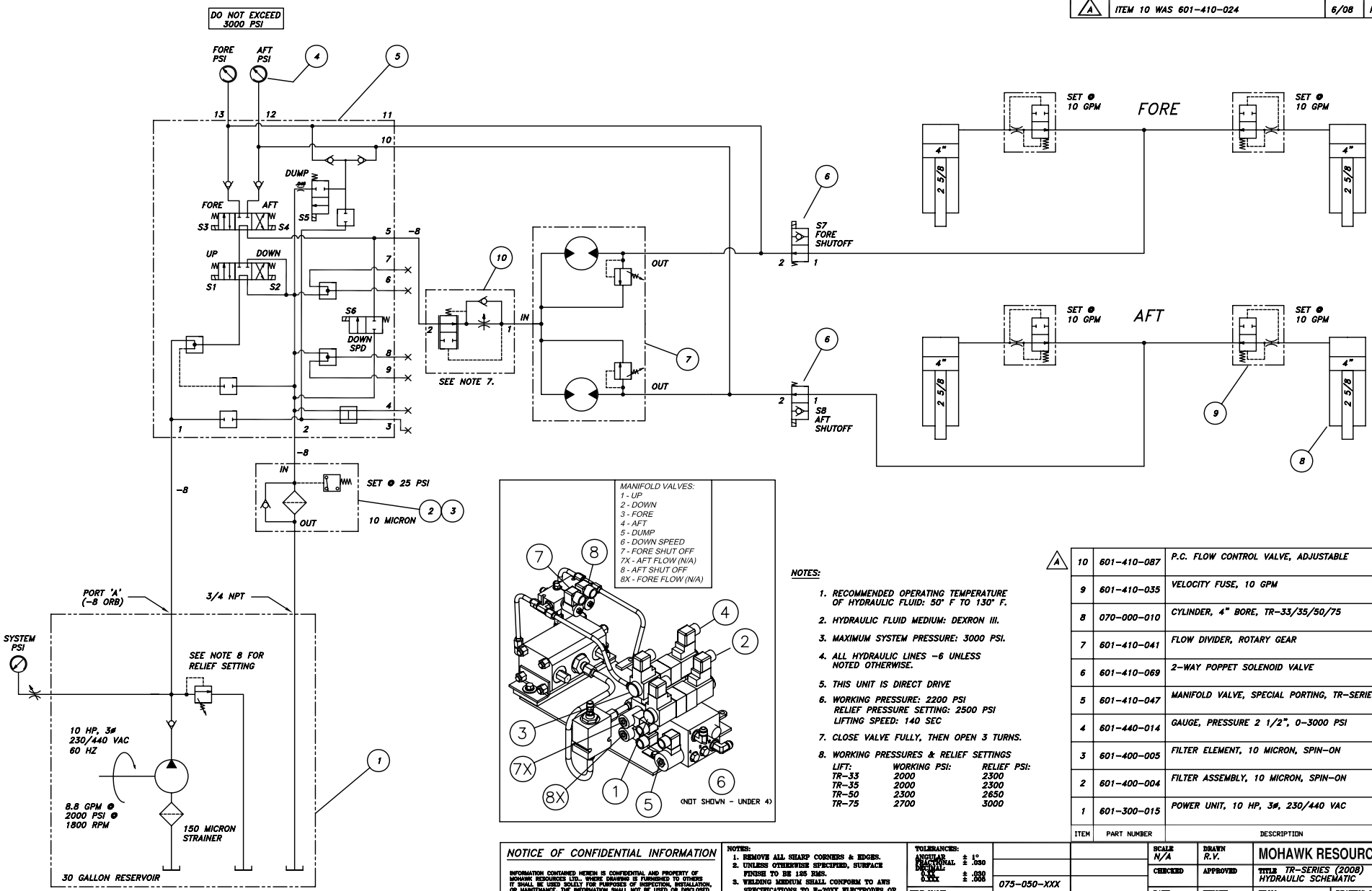

NOTES:

1. RECOMMENDED OPERATING TEMPERATURE OF HYDRAULIC FLUID: 50° F TO 130° F.
2. HYDRAULIC FLUID MEDIUM: DEXRON III.
3. MAXIMUM SYSTEM PRESSURE: 3000 PSI.
4. ALL HYDRAULIC LINES -6 UNLESS NOTED OTHERWISE.
5. THIS UNIT IS DIRECT DRIVE
6. WORKING PRESSURE: 2200 PSI
   RELIEF PRESSURE SETTING: 2500 PSI
   LIFTING SPEED: 140 SEC
7. CLOSE VALVE FULLY, THEN OPEN 3 TURNS.
8. WORKING PRESSURES & RELIEF SETTINGS

LIFT:	WORKING PSI:	RELIEF PSI:
TR-33	2000	2300
TR-35	2000	2300
TR-50	2300	2650
TR-75	2700	3000

ITEM	PART NUMBER	DESCRIPTION	QTY
10	601-410-087	P.C. FLOW CONTROL VALVE, ADJUSTABLE	REF
9	601-410-035	VELOCITY FUSE, 10 GPM	REF
8	070-000-010	CYLINDER, 4" BORE, TR-33/35/50/75	REF
7	601-410-041	FLOW DIVIDER, ROTARY GEAR	REF
6	601-410-069	2-WAY POPPET SOLENOID VALVE	REF
5	601-410-047	MANIFOLD VALVE, SPECIAL PORTING, TR-SERIES	REF
4	601-440-014	GAUGE, PRESSURE 2 1/2", 0-3000 PSI	REF
3	601-400-005	FILTER ELEMENT, 10 MICRON, SPIN-ON	REF
2	601-400-004	FILTER ASSEMBLY, 10 MICRON, SPIN-ON	REF
1	601-300-015	POWER UNIT, 10 HP, 3ø, 230/440 VAC	REF

NOTICE OF CONFIDENTIAL INFORMATION

INFORMATION CONTAINED HEREIN IS CONFIDENTIAL AND PROPERTY OF MOHAWK RESOURCES LTD., WHERE DRAWING IS FURNISHED TO OTHERS IT SHALL BE USED SOLELY FOR PURPOSES OF INSPECTION, INSTALLATION, OR MAINTENANCE. THE INFORMATION SHALL NOT BE USED OR DISCLOSED BY THE RECIPIENT FOR ANY OTHER PURPOSES WHATSOEVER.

NOTES:
1. REMOVE ALL SHARP CORNERS & EDGES.
2. UNLESS OTHERWISE SPECIFIED, SURFACE FINISH TO BE 125 RMS.
3. WELDING MEDIUM SHALL CONFORM TO AWS SPECIFICATIONS TO E-70XX ELECTRODES OR E-70T1 CODE 5.3 FLUX CORE WIRE ONLY.

TOLERANCES:
ANGULAR ± 1°
FRACTIONAL ± .030
DECIMAL:
0.XX ± .030
0.XXX ± .005

075-050-XXX
NEXT ASSEMBLY

FILE NAME 075-050-080

SCALE N/A | DRAWN R.V. | CHECKED | APPROVED | DATE 10/07 | WEIGHT N/A LB.

MOHAWK RESOURCES LTD.

TITLE TR-SERIES (2008) HYDRAULIC SCHEMATIC

FROM N/A | DRAWING NUMBER 075-050-080 | A

D-SIZE

REV.	DESCRIPTION	DATE	BY	APP'D.
A	DOWN SPEED ADDED WITH DOWN	6/08	R.V.	

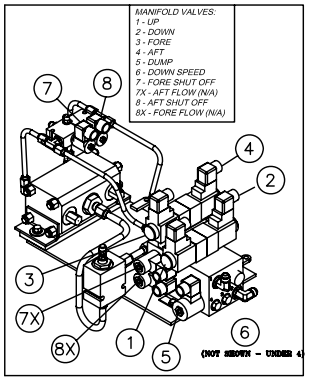

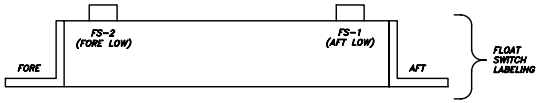

MOTOR VOLTAGE:	PHASE	O/L AMP SETTING: *	PRIMARY CONNECT:	SECONDARY CONNECT:	PRIMARY FUSING: **	SECONDARY FUSING: **	MAIN FEED MINIMUM:	MAX CIRCUIT BREAKER: ***
208 VAC	3#	40 AMP	H1-H2	X1-X4	1.6 AMP	3.2 AMP	#8/4	100 AMP
230 VAC	3#	36 AMP	H1-H2	X1-X4	1.4 AMP	3.2 AMP	#8/4	90 AMP
440 VAC	3#	18 AMP	H1-H4	X1-X4	0.75 AMP	3.2 AMP	#12/4	50 AMP
480 VAC	3#	18 AMP	H1-H4	X1-X3	0.6 AMP	3.2 AMP	#12/4	50 AMP
575 VAC	3#	15 AMP	H1-H5	X1-X4	0.6 AMP	3.2 AMP	#14/4	35 AMP

* - EQUAL TO FULL LOAD AMPS (O/L RATED 125% OF SETTING)
** - USE CLASS CC, TIME DELAY FUSES ONLY.
*** - BASED ON 250% OF FULL LOAD AMPS.

STANDARD MOTOR & STARTER WIRING DIAGRAM
208-230 VAC, 3#, 60 HZ

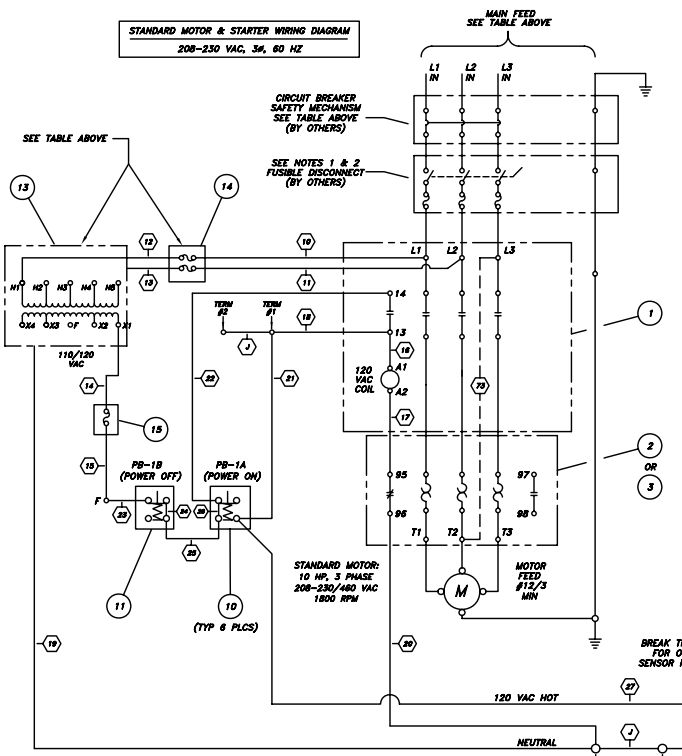

CONTROL CIRCUIT
(120 VAC)

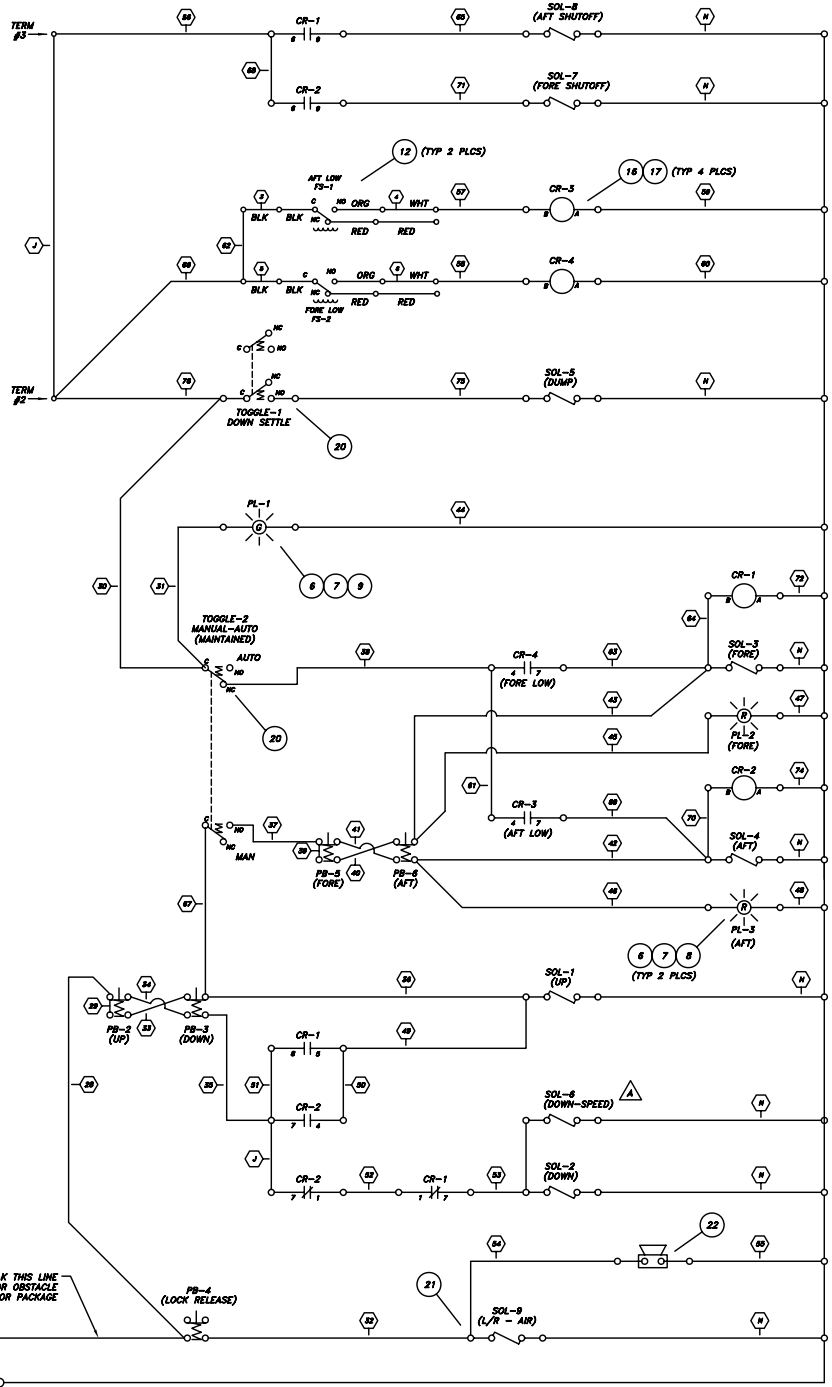

NOTES:

1. ALL ELECTRICAL EQUIPMENT AND WIRING SHALL CONFORM TO ANSI/NFPA 70-1990, NATIONAL ELECTRICAL CODE.
2. IT SHALL BE THE RESPONSIBILITY OF THE OWNER/EMPLOYER TO PROVIDE NECESSARY LOCKOUTS/TAGOUTS OF ENERGY SOURCES IN ACCORDANCE WITH ANSI Z244.1-1982, BEFORE ATTEMPTING REPAIRS.
3. ALL FIELD WIRING/ELECTRICAL RELATED LABOR SHALL BE PERFORMED BY CERTIFIED ELECTRICIANS.
4. UNIT MUST BE PROPERLY GROUNDED IN ACCORDANCE TO NEC ARTICLE 250 (GROUNDING), AND APPLICABLE LOCAL CODES.
5. (##) DENOTES WIRE NUMBERS.
6. LABEL MARKERS SHALL BE PLACED ON ALL WIRES (BOTH ENDS), SWITCHES, RELAYS, LAMPS, ETC.. ALL WIRES TO BE INSTALLED WITH TERMINAL LUGS. ALL CONNECTIONS SHALL BE WRENCH TIGHT.
7. THE FOLLOWING COLOR WIRES SHALL BE RESERVED:
   GREEN: ALL EQUIPMENT GROUNDING CONDUCTORS.
   WHITE: ALL NEUTRAL CONDUCTORS.
8. VERIFY PROPER MOTOR WIRING FOR PROPER VOLTAGE & ROTATION AT INITIAL START-UP.
9. TERMINAL STRIP TO REMOTES #18/3 TYPE SOW-A WIRE (MINIMUM).
10. ALL SOLENOIDS LOCATED ON MANIFOLD VALVE (EXCEPT AIR SOLE).
11. STARTER COIL: 90 VA IN-RUSH, 7.7 VA SEALED.
    ALL RELAY COILS: 0.040 AMP DRAW. (5 WATT)
    DYNEX SOLENOID VALVES: 20 WATT HOLD, 180 WATT INRUSH
    OTHER SOLENOID VALVES: 20 WATT INRUSH
    MAX CONTROL CIRCUIT AMP DRAW @ 120 VAC: 2 AMP.
12. LAST WIRE NUMBER USED: #76.

ITEM	PART NUMBER	DESCRIPTION	QTY
22	601-160-002	SONALERT (1)	REF
21	601-410-060	PNEUMATIC SOLENOID VALVE, 120 VAC (1)	REF
20	601-110-045	TOGGLE SWITCH, MAINTAINED, DPDT (2)	REF
19	601-160-022	TERMINAL BLOCK JUMPER (8)	REF
18	601-160-021	TERMINAL BLOCK, 12 POLE (2)	REF
17	601-160-017	SOCKET, RELAY, SCREW-IN (4)	REF
16	601-160-035	RELAY, CONTROL, 3PDT (120 VAC COIL) (4)	REF
15	601-120-074	FUSE BLOCK, SINGLE, MIDGET (1)	REF
14	601-120-073	FUSE BLOCK, DOUBLE, CLASS CC (1)	REF
13	601-160-043	TRANSFORMER, 250 VA (1)	REF
12	601-110-041	LEVEL SWITCH, NMO #178290 (2)	REF
11	601-110-033	PUSH BUTTON, MOMENTARY, RED MUSHROOM (1)	REF
10	601-110-010	PUSH BUTTON, MOMENTARY CONTACT, GREEN (6)	REF
9	601-160-090	FLAT LENSE, GREEN (1)	REF
8	601-160-048	FLAT LENSE, RED (2)	REF
7	601-160-047	MINITURE LAMP, SLIDE BASE, 120 VAC (3)	REF
6	601-160-046	LAMP SOCKET, 11/16" DIA HOLE (3)	REF
5	033-002-114	DRILLED PANEL, ENCLOSURE (1)	REF
4	033-002-113	CUSTOM DRILLED ENCLOSURE (1)	REF
(440-600 VAC) 3	601-120-082	IEC OVERLOAD RELAY, ADJUSTABLE, 22-32 AMP (1)	REF
(STD) 2	601-120-087	IEC OVERLOAD RELAY, ADJUSTABLE, 40-50 AMP (1)	REF
(STD) 1	601-100-066	IEC CONTACTOR W/ 120 VAC COIL, RATED 10HP, 3# (1)	REF

NOTICE OF CONFIDENTIAL INFORMATION
INFORMATION CONTAINED HEREIN IS CONFIDENTIAL AND PROPERTY OF MOHAWK RESOURCES LTD. THERE SHOULD BE NO REPRODUCTION, IN WHOLE OR IN PART WITHOUT THE PERMISSION OF MOHAWK RESOURCES LTD. OR SHALL BE USED SOLELY FOR PURPOSES OF PURCHASE, OPERATION, OR MAINTENANCE. THE INFORMATION SHALL NOT BE USED AS DISCLOSED BY THE RECIPIENT FOR ANY OTHER PURPOSES WHATSOEVER.

NOTES:
1. REMOVE ALL SHARP CORNERS & EDGES.
2. UNLESS OTHERWISE SPECIFIED, SURFACE FINISH TO BE 125 RMS.
3. WELDING RESULT SHALL CONFORM TO AWS SPECIFICATIONS TO E-TYPE ELECTRODES ON B-TYPE CODE 3.5 PLUS CODE WHEN ONLY.

TOLERANCES:
ANGULAR ± 1°
DECIMAL ± .000
FRACTIONAL ± 1/64
X.XX ± .005
X.XXX ± .002

075-050-XXX
NEXT ASSEMBLY
FILE NAME 075-050-093

SCALE N/A	DRAWN RV	MOHAWK RESOURCES LTD.
CHECKED	APPROVED	TITLE TR-SERIES (2007) ELEC. SCHEM. 230/480, 1# OR 3#
DATE 10/07	WEIGHT N/A LB.	FORM N/A	DRAWING NUMBER 075-050-093	A

E-SIZE

REV.	DESCRIPTION	DATE	BY	APP'D.
A	DOWN SPEED VALVE ADDED WITH DOWN	R.V.	6/08	

FOR 208-230 VAC, 3ø, NO WIRE #73. (SET O/L @ 40 AMP)
FOR 440-480 VAC, 3ø, WIRE X-FORMER: H1 TO H4, AND NO WIRE #73. (SET O/L @ 22 AMP)
FOR 575-600 VAC, 3ø, WIRE X-FORMER: H1 TO H5, AND NO WIRE #73. (SET O/L @ 22 AMP)

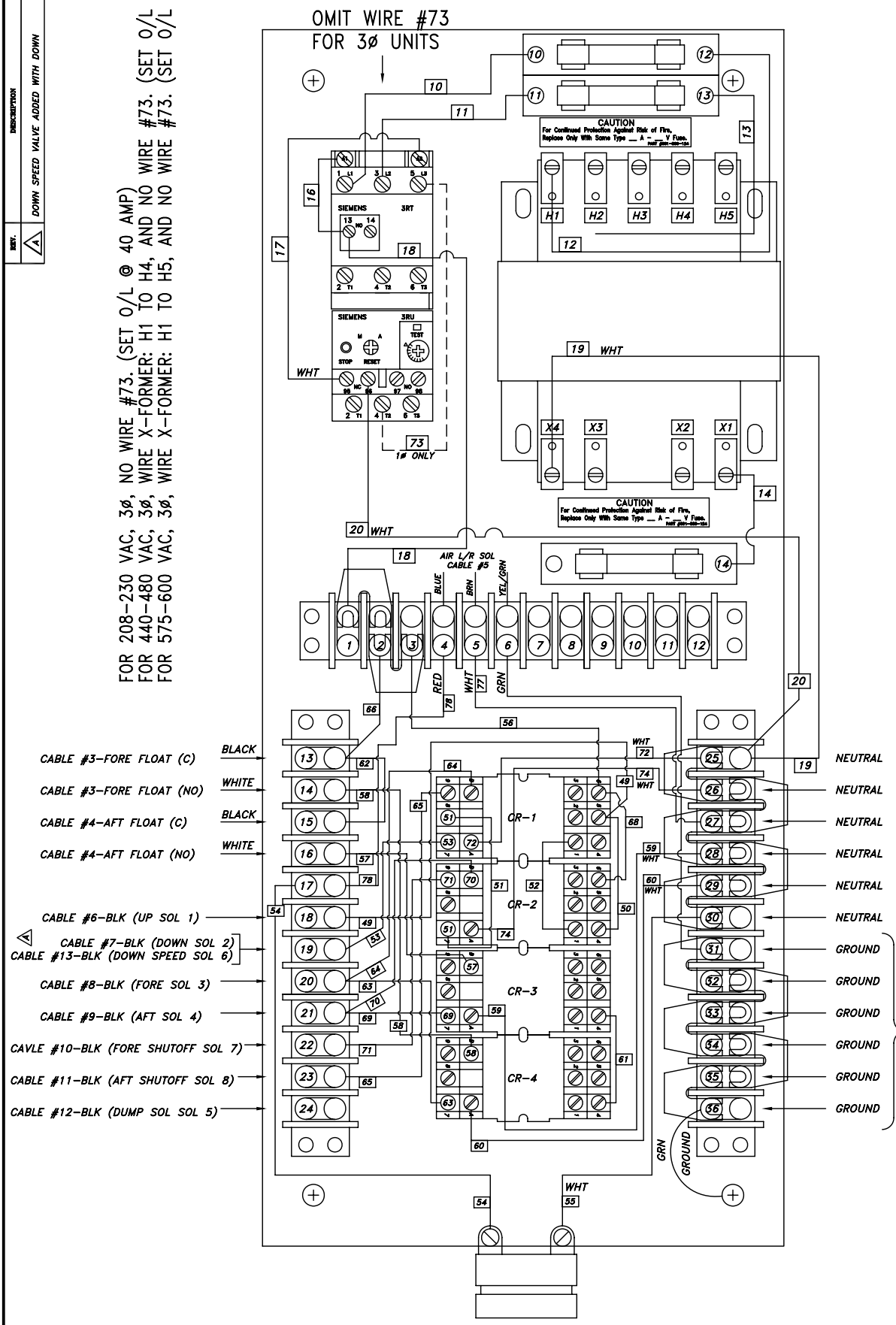

NOTES:
1. REMOVE ALL SHARP CORNERS & EDGES.
2. UNLESS OTHERWISE SPECIFIED, SURFACE FINISH TO BE 125 RMS.
3. WIRING WITHIN THIS SHELL CONFORMS TO AIR SPECIFICATIONS TO B-70XX ELECTROVERS OR B-70XX CODE 5.3 FLUX CORE WIRE ONLY.

TOLERANCES:
ANGULAR ± 1°
DECIMAL ± .000
FRACTIONAL ± .000
0.XX ± .005
0.XXX ± .002

FILE NAME 075-050-094

075-050-XXX
NEXT ASSEMBLY

SCALE N/A
CHECKED
DATE 10/07
DRAWN RV
APPROVED
WEIGHT N/A LB.

MOHAWK RESOURCES LTD.

TITLE ENCLOSURE WIRING, TR-SERIES (2007)

FROM N/A

DRAWING NUMBER 075-050-094 A

NOTICE OF CONFIDENTIAL INFORMATION

INFORMATION CONTAINED HEREIN IS CONFIDENTIAL AND PROPERTY OF MOHAWK RESOURCES LTD., THIS DRAWING IS FURNISHED TO OTHERS IN BELIEF THAT THE INFORMATION SHALL NOT BE USED, REPRODUCED OR MAINTAINED, THE INFORMATION SHALL NOT BE USED OR DISCLOSED BY THE RECIPIENT FOR ANY OTHER PURPOSES WHATSOEVER.

D-SIZE

REV.	DESCRIPTION	DATE	BY	APP'D.

TOP INSIDE COVER OF PANEL

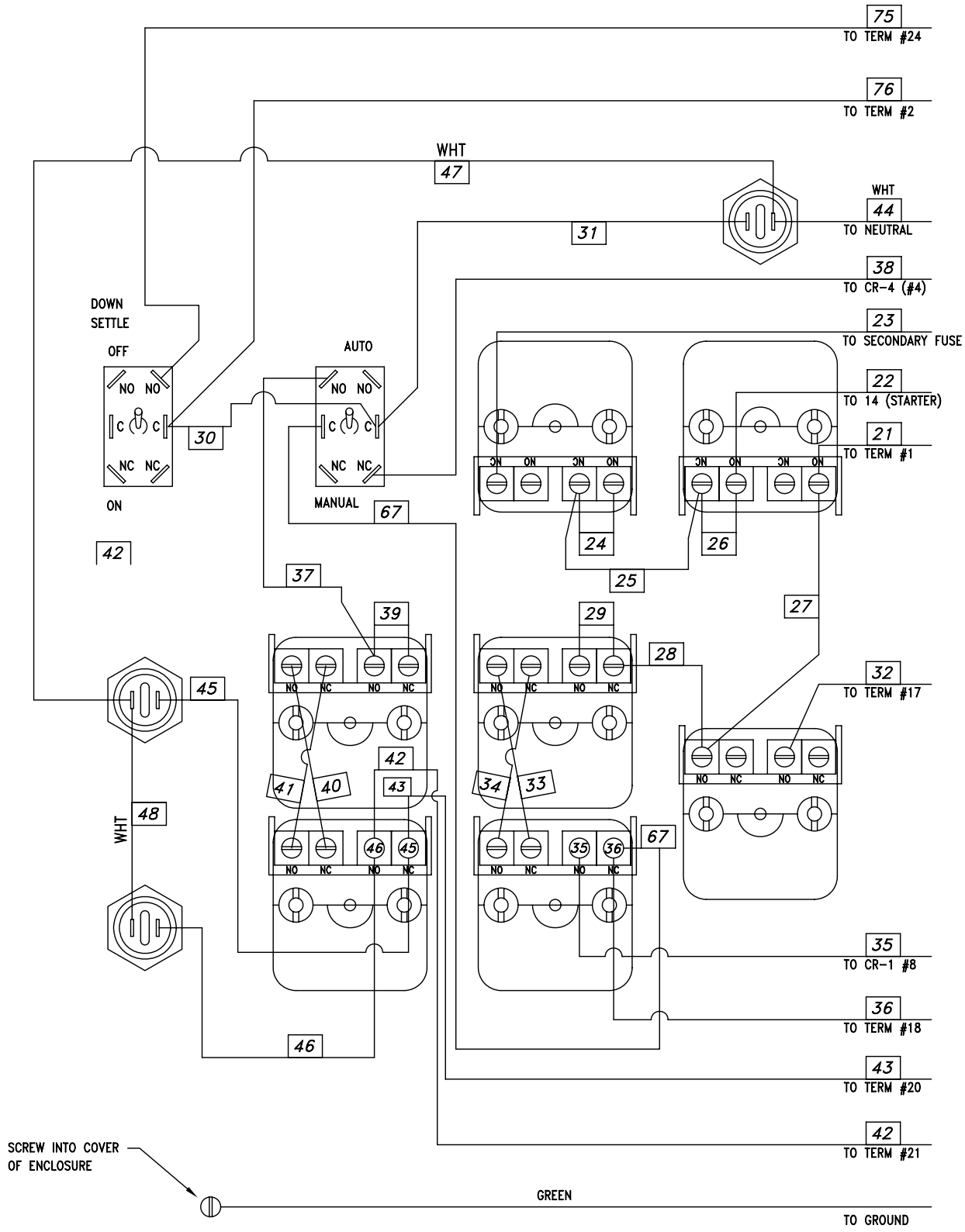

BOTTOM INSIDE COVER OF PANEL

C-SIZE

MOHAWK RESOURCES LTD.

TITLE: PANEL WIRING, TR-SERIES (2007)

DRAWING NUMBER: 075-050-091

SCALE	DRAWN	FROM
N/A	RV	N/A
CHECKED	APPROVED	WEIGHT N/A LB.
DATE 10/07		

NEXT ASSEMBLY: 075-050-XXX

TOLERANCES:
ANGULAR ± 1°
FRACTIONAL ± .030
DECIMAL: 0.XX ± .030, 0.XXX ± .005

FILE NAME: 075-050-091

NOTES:
1. REMOVE ALL SHARP CORNERS & EDGES.
2. UNLESS OTHERWISE SPECIFIED, SURFACE FINISH TO BE 125 RMS.
3. WELDING MEDIUM SHALL CONFORM TO AWS SPECIFICATIONS TO E-70XX ELECTRODES OR E-70T1 CODE 5.3 FLUX CORE WIRE ONLY.

NOTICE OF CONFIDENTIAL INFORMATION

INFORMATION CONTAINED HEREIN IS CONFIDENTIAL AND PROPERTY OF MOHAWK RESOURCES LTD. WHERE DRAWING IS FURNISHED TO OTHERS IT SHALL BE USED SOLELY FOR PURPOSES OF INSPECTION, INSTALLATION, OR MAINTENANCE. THE INFORMATION SHALL NOT BE USED OR DISCLOSED BY THE RECIPIENT FOR ANY OTHER PURPOSES WHATSOEVER.

MOHAWK

PRE-EXISTING SLAB REQUIREMENTS & NEW SLAB RECOMMEDATIONS

MOHAWK LIFTS, LLC.

65 VROOMAN AVE.
AMSTERDAM, NY 12010
TOLL FREE : 1-800-833-2006
LOCAL : 1-518-842-1431
FAX : 1-518-842-1289
INTERNET: www.MOHAWKLIFTS.com
E-MAIN: Service@MOHAWKLIFTS.com

MOHAWK LIFTS, LLC.

PRE-EXISTING Minimum Floor Requirements

Mohawk Lift Model	Minimum Slab Thickness	Minimum Compressive Strength	Reinforcement Size	Reinforcement Spacing (Rebar)
A-7	4-1/2”	4000 psi with 28 day aging	#6 rebar	12 in.
System IA	4-1/2”	4000 psi with 28 day aging	#6 rebar	12 in.
System IA-10	4-1/2”	4000 psi with 28 day aging	#6 rebar	12 in.
LMF-12	6 1/2”	4000 psi with 28 day aging	#6 rebar	12 in.
TP-15	6 1/2”	4000 psi with 28 day aging	#6 rebar	10 in.
TP-16	6 1/2”	4000 psi with 28 day aging	#6 rebar	10 in.
TP-18	8”	4000 psi with 28 day aging	#6 rebar	10 in.
TP-20	8”	4000 psi with 28 day aging	#6 rebar	10 in.
TP-26	12”	4000 psi with 28 day aging	#6 rebar	10 in.
TP-26-W	8”	4000 psi with 28 day aging	#6 rebar	10 in.
TP-30	12”	4000 psi with 28 day aging	#6 rebar	10 in.
TP-30-W	8”	4000 psi with 28 day aging	#6 rebar	10 in.
TR-19	4 1/2”	n/a	ACI Temp only*	ACI Temp only*
FL-25	4 1/2”	n/a	ACI Temp only*	ACI Temp only*
TR-25A	4 1/2”	n/a	ACI Temp only*	ACI Temp only*
TR-33	6” or (4 1/2” **)	n/a	ACI Temp only*	ACI Temp only*
TR-35	6” or (4 1/2” **)	n/a	ACI Temp only*	ACI Temp only*
TR-50	6” or (4 1/2” **)	n/a	ACI Temp only*	ACI Temp only*
TR-75	6” or (4 1/2” **)	n/a	ACI Temp only*	ACI Temp only*

* The floor must be properly aged to American Concrete Institute specifications. The floor does not require reinforcement, but a minimum of wire mesh is recommended.
** Larger 4’ x 4’ base pads (available from Mohawk) required for floors with a thickness range less than 6”, but greater or equal to 4 1/2”.

The floor should be test drilled to verify minimum floor thickness and to confirm building drawings. A core sample should be obtained and tested to verify minimum floor compressive strength. When investigating floor properties, consult building drawings to verify proper floor reinforcement.

All 2-post lifts require a continuous single slab. Spanning expansion seams or positioning posts on separate slabs is not acceptable.

--- ALL MOHAWK LIFTS MUST BE INSTALLED ON CONCRETE ONLY ---

DO NOT install any Mohawk lift on any surface other than concrete, conforming to the minimum compressive strength, aging, reinforcement, and thickness stated in the table above.
DO NOT install any Mohawk lift on expansion seams or on cracked or defective concrete. All ¾ inch diameter anchors must be a minimum of 6 inches away from any expansion seams, control joints or other inconsistencies in the concrete. All 1 inch diameter anchors must be a minimum of 7 ½ inches away from any expansion seams, control joints or other inconsistencies in the concrete. Refer to anchor manufacturer specifications for specific information concerning edge distances and bolt to bolt distance requirements.
NEVER, NEVER install a Mohawk lift on hand mixed concrete.
DO NOT install any Mohawk lift on a secondary floor level or on any ground floor with a basement beneath without written authorization from the building architect and prior consultation and approval from MOHAWK LIFTS, LLC.

If the floor does not meet these minimum pre-existing floor requirements, it is suggested to construct a slab as outlined in ***New Slab Recommendations***. If the location of the lift is in a seismic zone, contact MOHAWK LIFTS, LLC. for seismic slab designs.

New Slab Recommendations:

The information contained in this appendage supercedes any other information given in the accompanied manual. This information is presented for design recommendations for a new concrete slab in the event that the pre-existing floor does not meet minimum requirements of the applicable lift type. Please read all instructions below carefully before producing new slab.

Basic Concrete Requirements:

Minimum Tensile Strength of Concrete:	4,000 P.S.I.
Minimum Aging of New Concrete Slab:	28 days (cure time)
Minimum Thickness of Concrete Slab:	See New Slab Table & Figure Attached
Minimum Width and Length of Slab:	See New Slab Table & Figure Attached

All properties of the new concrete slab are mandatory and must conform to the above stated properties before installation of the lift is deemed acceptable. The new slab must be totally surrounded by an existing concrete floor. Certified strength documentation should be obtained from the firm who supplies the concrete mixture at the time of the pour.

The slab above is designed as “stand alone” and does not take into account the contribution of strength from surrounding concrete. It may be desirable to reinforce the new slab to the pre-existing surrounding floor. Care should be taken to locate these specific reinforcement bars away from any anchor positions of the specific lift.

This new slab design does not account for second floor installations or installations in a ground floor with a basement beneath. For this case, the lift should not be installed without written authorization from the building architect.

All ¾ inch diameter anchors must be a minimum of 6 inches away from any expansion seams, control joints or other inconsistencies in the concrete. All 1 inch diameter anchors must be a minimum of 7 ½ inches away from any expansion seams, control joints or other inconsistencies in the concrete. Refer to anchor manufacturer specifications for specific information concerning edge distances and bolt to bolt distance requirements.

NEVER, NEVER, hand mix your own concrete.

New Slab Recommendations

File: New-slab.xls

Rev Date: 6/7/06

NEW SLABS MUST BE 12" THICK MINIMUM !! (See Notes Below)

Lift Model	W Slab Width, (Inches)	L Slab Length, (Inches)	R Reinforcement Size, (Inch) (See Note 1 & 2)	S1 & S2 Reinforcement Spacing, (Inch) (See Note 3)	D Wej-it Dia, (Inch)	I Wej-it Length, (Inch)
A-7	48" Min	144" Min	8 - #4 - Main Bars 21 - #4 - Temperature Bars	6 in - Long Bars 8 in - Short Bars	3/4 in	5 in
System IA	48" Min	161" Min	8 - #4 - Main Bars 21 - #4 - Temperature Bars	6 in - Long Bars 8 in - Short Bars	3/4 in	5 in
System IA-10	48" Min	161" Min	8 - #4 - Main Bars 21 - #4 - Temperature Bars	6 in - Long Bars 8 in - Short Bars	3/4 in	5 in
LMF-12	72" Min	168" Min	12 - #4 - Main Bars 23 - #4 - Temperature Bars	6 in - Long Bars 8 in - Short Bars	3/4 in	6 in
TP-15	72" Min	168" Min	12 - #4 - Main Bars 23 - #4 - Temperature Bars	6 in - Long Bars 8 in - Short Bars	3/4 in	6 in
TP-16	72" Min	168" Min	12 - #4 - Main Bars 23 - #4 - Temperature Bars	6 in - Long Bars 8 in - Short Bars	3/4 in	6 in
TP-18	72" Min	186" Min	18 - #4 - Main Bars 24 - #4 - Temperature Bars	4 in - Long Bars 8 in - Short Bars	3/4 in	6 in
TP-20	72" Min	186" Min	18 - #4 - Main Bars 24 - #4 - Temperature Bars	4 in - Long Bars 8 in - Short Bars	3/4 in	6 in
TP-26	72" Min	198" Min	18 - #4 - Main Bars 24 - #4 - Temperature Bars	4 in - Long Bars 8 in - Short Bars	1 in	10 in
TP-30	72" Min	198" Min	18 - #4 - Main Bars 24 - #4 - Temperature Bars	4 in - Long Bars 8 in - Short Bars	1 in	10 in
TR-19 *	24" Min	24" Min	4 - #4 Bars 8 Bars Total	6 in - Each Way	3/4 in	5 in
FL-25 *	24" Min	24" Min	4 - #4 Bars 8 Bars Total	6 in - Each Way	3/4 in	5 in
TR-25 *	24" Min	24" Min	4 - #4 Bars 8 Bars Total	6 in - Each Way	3/4 in	5 in
TR-33 *	72" Min	72" Min	12 - #4 Bars 24 Bars Total	6 in - Each Way	3/4 in	5 in
TR-35 *	72" Min	72" Min	12 - #4 Bars 24 Bars Total	6 in - Each Way	3/4 in	5 in
TR-50 *	72" Min	72" Min	12 - #4 Bars 24 Bars Total	6 in - Each Way	3/4 in	5 in
TR-75 *	72" Min	72" Min	12 - #4 Bars 24 Bars Total	6 in - Each Way	3/4 in	5 in

* Four Separate Slabs Formed at each Post.

Note 1: An additional layer of 6 x 6 - 10/10 WWF at mid height of new slab would be advisable in any extremely hot or cold climate to control cracking due to temperature fluctuations and shrinkage. At anchor bolt locations only keep WWF mesh below the elevation of the anchorage to avoid drilling interference with the wire.

Note 2: The main reinforcing and lower temperature steel shall be Grade 60 deformed bars

Note 3: The tolerance on spacing of the bars in each direction shall be the value shown, plus or minus 1 inch. In addition, the number of bars specified in the table must be used.

Note 4: The concrete outline dimensions and the reinforcing shown are for a foundation bed allowable bearing capacity of not less than 2,000 lb/sq ft (1 ton per square foot). Many clays, and most all firm clay, hard clay, sand & clay mixes, dry sands, course dry sands, dry sand and silt mixes, sand and gravel mixes, and gravel type soils meet or exceed this allowable bearing capacity. If there is question regarding the foundation bed allowable bearing capacity, a soils testing engineer should be consulted. Situations where the allowable bearing capacity is lower than this value will require special attention.

NEW RECOMMENDED SLAB DESIGN FOR 2-POST LIFTS

FILE: MAN066
DATE: 2/98
REV DATE: 7/2003

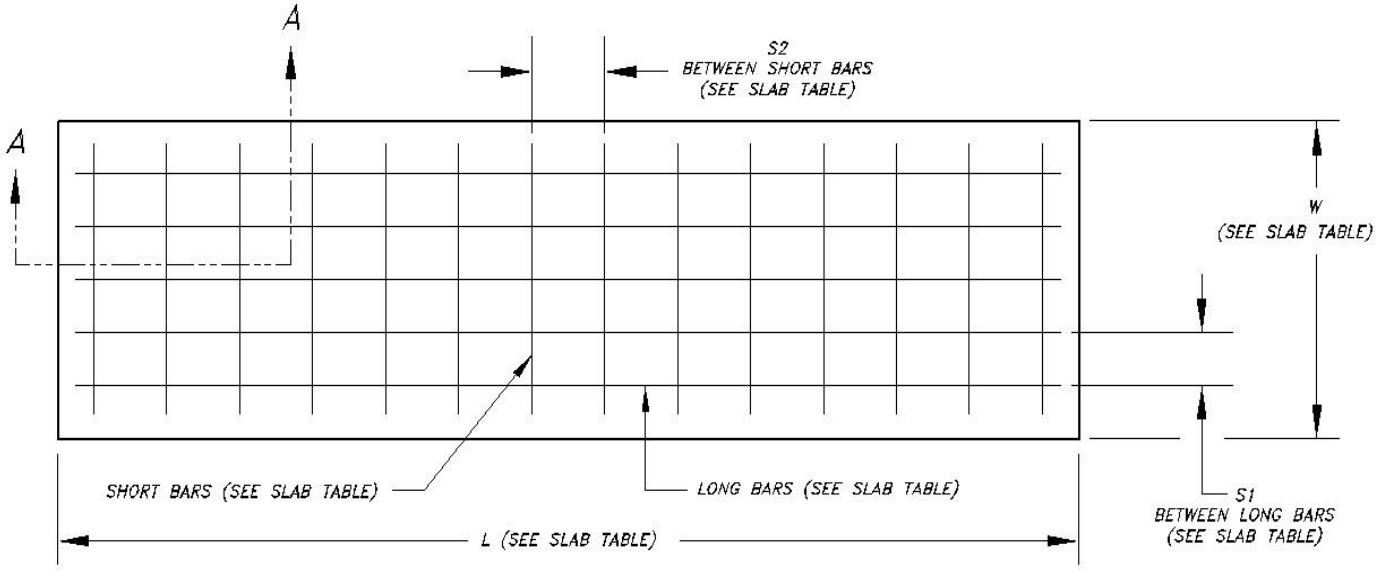

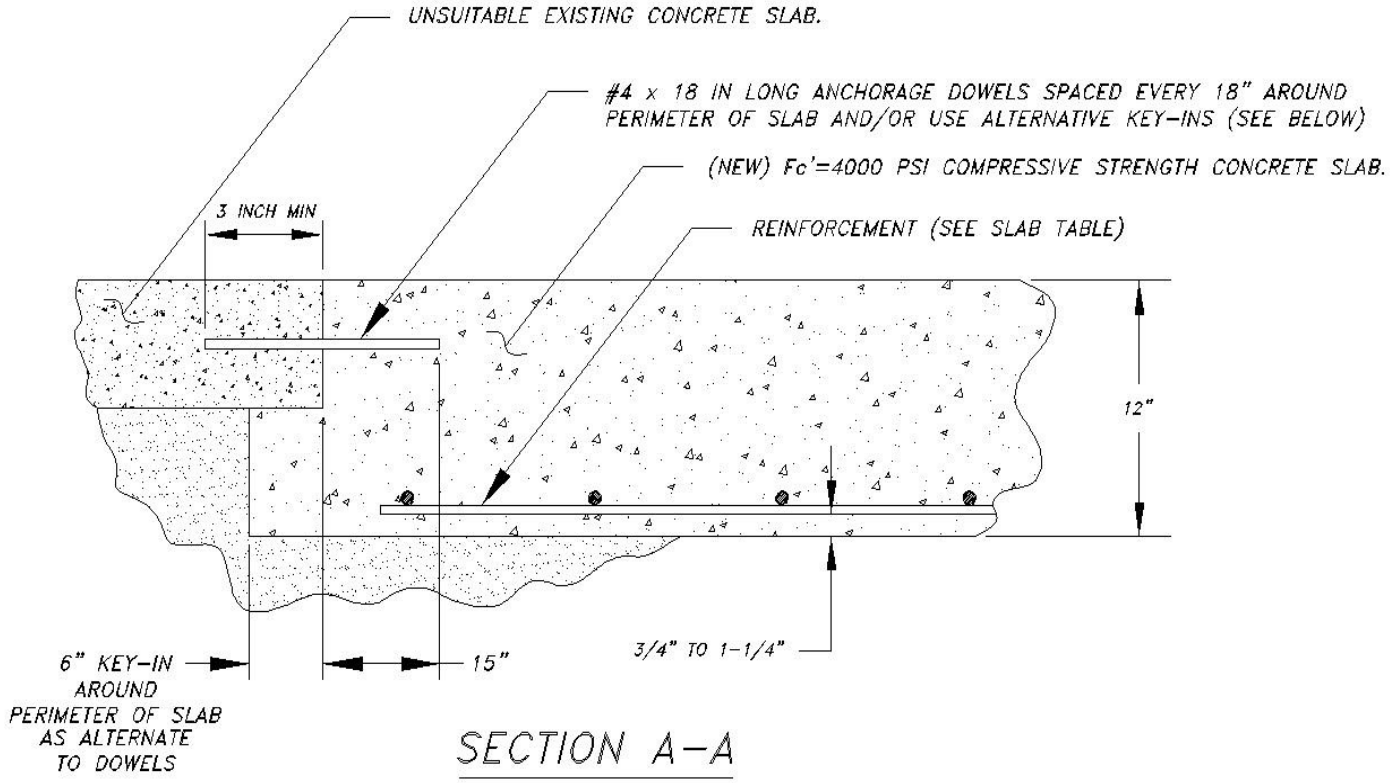

SECTION A-A

NEW RECOMMENDED SLAB DESIGN FOR 4-POST LIFTS

FILE: MAN089
DATE: 10/00
REV DATE: 7/2003

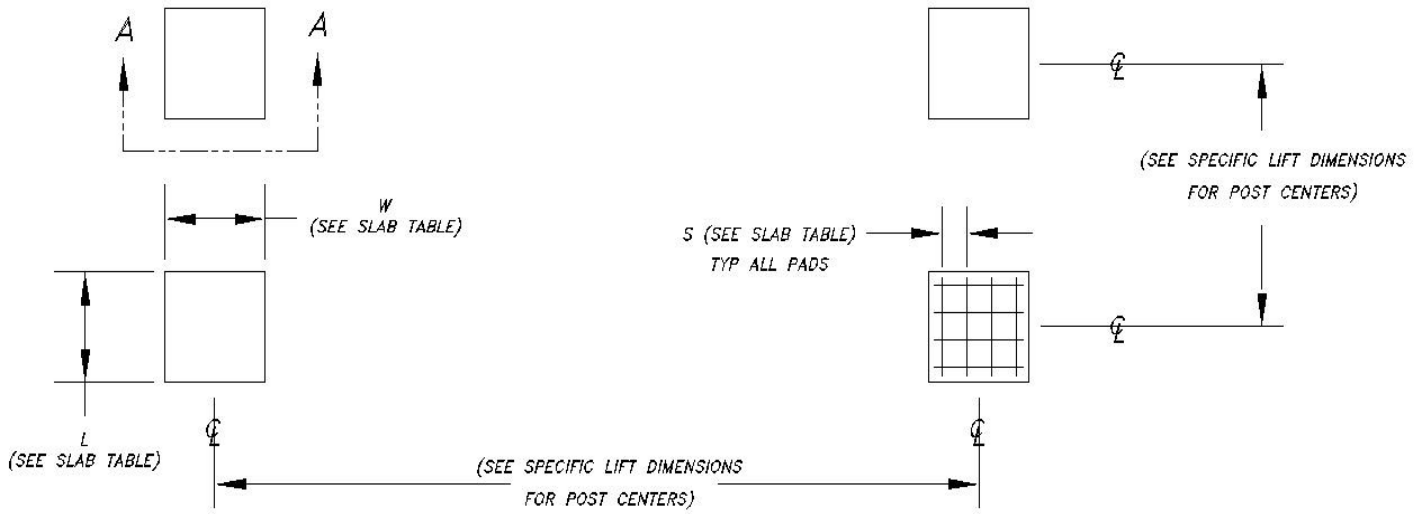

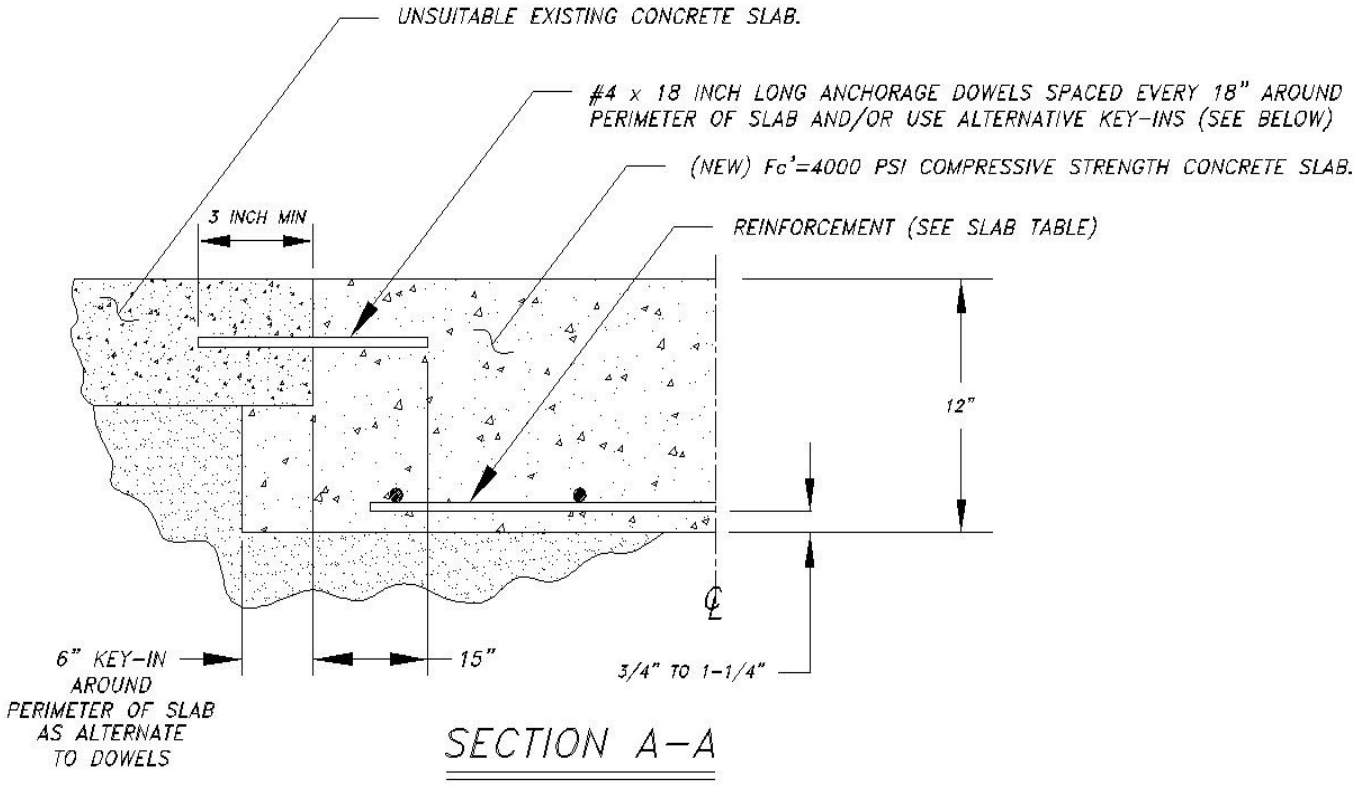

SECTION A-A

REV.	DESCRIPTION	DATE	BY	APP'D.
△				

TYPICAL BASE PLATE DETAIL
(SYSTEM IA SHOWN BELOW – 8 ANCHORS PER BASE PLATE)

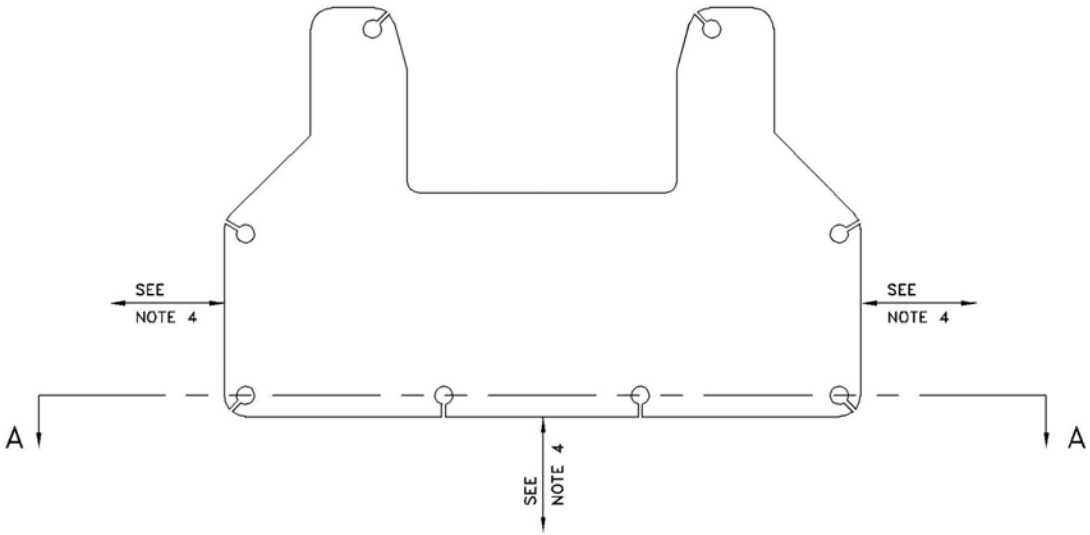

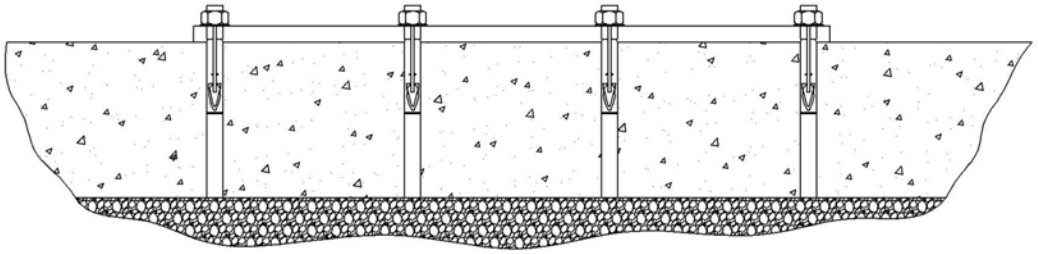

SECTION A–A:

BASE PLATE ANCHORING INSTRUCTIONS:

1. LOCATE POSTS IN DESIRED LOCATION OF BAY, PER LIFT SETUP DIMENSIONS. REFER TO LIFT MANUAL FOR INSIDE DIMENSIONS OF COLUMNS, ETC.
(FOR SYSTEM IA–10, THE INSIDE POST DIMENSION IS 120")

2. MATCH DRILL ALL BASE PLATE HOLES. REFER TO ANCHOR BOLT INSTALLATION SPECIFICATIONS ATTACHED FOR DRILL SIZE. (3/4" DIAMETER ORIGINAL WEJ–IT STYLE EXPANSION ANCHOR BOLTS).

3. INSTALL ANCHORS PER ANCHOR BOLT INSTALLATION SPECIFICATIONS ATTACHED. SHIM UNDER BASE PLATE AS NEEDED TO ENSURE THAT POSTS ARE SQUARE AND PLUMB (MAXIMUM OF 1/4") WITH COLORED SHIMS PROVIDED (HORSESHOE SHAPED).

4. ALL ANCHORS MUST BE A MINIMUM OF 6" AWAY FROM ANY EXPANSION SEAM, CONTROL JOINT, OR OTHER FLOOR INCONSISTENCIES.

5. DRILLING THRU ENTIRE SLAB THICKNESS IS PREFERED WHEN POSSIBLE. THIS ALLOWS ANCHORS TO BE HAMMERED FLUSH TO CONCRETE IF LIFT IS RE–LOCATED.

C-SIZE

NOTICE OF CONFIDENTIAL INFORMATION

INFORMATION CONTAINED HEREIN IS CONFIDENTIAL AND PROPERTY OF MOHAWK RESOURCES LTD., WHERE DRAWING IS FURNISHED TO OTHERS IT SHALL BE USED SOLELY FOR PURPOSES OF INSPECTION, INSTALLATION, OR MAINTENANCE. THE INFORMATION SHALL NOT BE USED OR DISCLOSED BY THE RECIPIENT FOR ANY OTHER PURPOSES WHATSOEVER.

NOTES:
1. REMOVE ALL SHARP CORNERS & EDGES.
2. UNLESS OTHERWISE SPECIFIED, SURFACE FINISH TO BE 125 RMS.
3. WELDING MEDIUM SHALL CONFORM TO AWS SPECIFICATIONS TO E–70XX ELECTRODES OR E–70TI CODE 5.3 FLUX CORE WIRE ONLY.

TOLERANCES:
ANGULAR ± 1°
FRACTIONAL ± .030
DECIMAL:
0.XX ± .030
0.XXX ± .005

FILE NAME ZZ912

009–010–006
NEXT ASSEMBLY

SCALE	DRAWN	MOHAWK RESOURCES LTD.	
1/4	rwv7089		
CHECKED R.V.	APPROVED	TITLE Base Plate Anchoring Detail	
DATE 2/05	WEIGHT N/A LB.	FROM N/A	DRAWING NUMBER ZZ912 △

The messages and pictographs shown are generic in nature and are meant to generally represent hazards common to all automotive lifts regardless of specific style.

Funding for the development and validation of these labels was provided by the Automotive Lift Institute, PO Box 33116 Indialantic, FL 32903

They are protected by copyright. Set of labels may be obtained from ALI or its member companies

© 1992 by ALI, Inc. ALI/WL200c

SAFETY INSTRUCTIONS

Read operating and safety manuals before using lift. ©

SAFETY INSTRUCTIONS

Proper maintenance and inspection is necessary for safe operation. ©

SAFETY INSTRUCTIONS

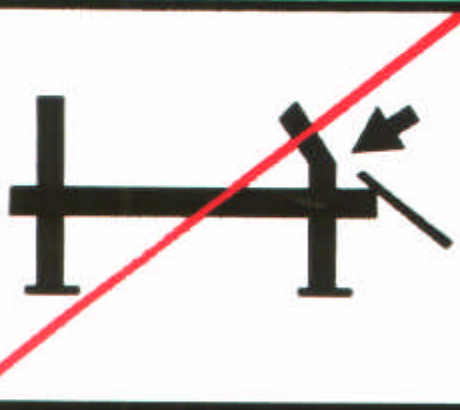

Do not operate a damaged lift. ©

The messages and pictographs shown are generic in nature and are meant to generally represent hazards common to all automotive lifts regardless of specific style.

Funding for the development and validation of these labels was provided by the Automotive Lift Institute, PO Box 33116 Indialantic, FL. 32903.

They are protected by copyright. Set of labels may be obtained from ALI or its member companies.

© 1992 by ALI, Inc. ALI/WL200s

⚠ WARNING

Clear area if vehicle is in danger of falling.

©

⚠ WARNING

Remain clear of lift when raising or lowering vehicle.

©

⚠ WARNING

Keep clear of pinch points when lift is moving.

©

⚠ WARNING

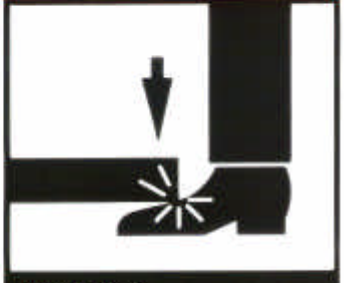

Keep feet clear of lift while lowering.

©

⚠ WARNING

Do not override self-closing lift controls.

©

⚠ WARNING

Chock wheel to prevent vehicle movement.

©

The messages and pictographs shown are generic in nature and are meant to generally represent hazards common to all automotive lifts regardless of specific style

Funding for the development and validation of these labels was provided by the Automotive Lift Institute, PO Box 33116 Indialantic, FL. 32903

They are protected by copyright. Set of labels may be obtained from ALI or its member companies

© 1992 by ALI, Inc. ALI/WL200w

MOHAWK LIFT PRODUCTS

The Lifts You Can't Wear Out

TWO POST

Model System IA-10

Model TP-20

FOUR POST

Model TR-75

MOBILE COLUMN

Model MP-18-007

PARALLELOGRAM

Model 75-32-F

VERTICAL RISE

Model V-77-30S

MOHAWK LIFTS

Mohawk Lifts, LLC.
P.O. Box 110 • 65 Vrooman Ave
Amsterdam, NY 12010
Phone: (800) 833-2006 • (518) 842-1431
www.mohawklifts.com

SEND US YOUR PHOTOS!

MOHAWK IS ALWAYS INTERESTED IS SEEING HOW YOUR LIFTS ARE USED. WE HAVE CREATED AN ON-LINE PHOTO DATABASE FOR CUSTOMERS TO VIEW OUR LIFTS IN USE.

VISIT WWW.MOHAWKLIFTS.COM/PR/ AND MAYBE WE CAN ADD YOUR PHOTOS TO OUR COLLECTION.
(JPG FORMATS PREFERED)

E-MAIL YOUR PHOTOS AND COMMENTS TO:
PHOTOS@MOHAWKLIFTS.COM

BEST REGARDS & HAPPY LIFTING!

YOUR FRIENDS AT MOHAWK LIFTS