MOHAWK

INSTALLATION & OPERATION MANUAL

MP-18-AF-SERIES

ELECTRIC/HYDRAULIC PORTABLE LIFT

4 & 6 POST ARRANGEMENTS

MOHAWK RESOURCES LTD.
65 VROOMAN AVENUE
P. O. BOX 110
AMSTERDAM, NY 12010
TOLL FREE: 1-800-833-2006
FAX: 1-518-842-1289
LOCAL: 1-518-842-1431

Mohawk File: MP-18-AF-Series.doc
Rev: 5/20/03

READ MANUAL THOROUGHLYBEFORE INSTALLING, OPERATING OR MAINTAINING LIFT !!

SAFETY INSTRUCTIONS

1. Read all instructions.
2. Inspect lift daily. Do not operate if it malfunctions or problems have been encountered.
3. Never attempt to overload the lift. The manufacturer's rated capacity is shown on the identification label on the power side column. Do not override the operating controls or the warranty will be void.
4. Only trained and authorized personnel should operate the lift. Do not allow customers or bystanders to operate the lift or be in the lift area.
5. Position the lift support forks to contact the vehicle tires. Raise the lift until the forks contact the tires. Check forks for secure contact with the vehicle tires, then raise the lift to the desired working height.
6. NOTE: Always use all 4 posts to raise and support vehicle.
7. Note that the removal or installation of some vehicle parts may cause a critical load shift in the center of gravity and may cause the vehicle to become unstable. Refer to the vehicle manufacturer's service manual for recommended procedures.
8. Always keep the lift area free of obstructions and debris. Grease and oil spills should always be cleaned up immediately.
9. Never raise vehicle with passengers inside.
10. Before lowering check area for any obstructions.
11. Before driving vehicle between the posts, position the lift forks to allow vehicle to freely enter lifting area. To not hit or run over forks as this could damage the lift and/or the vehicle.
12. Before removing the vehicle from the lift area, position the lift forks to allow vehicle to freely leave lifting area. To not hit or run over forks as this could damage the lift and/or the vehicle.
13. Care must be taken as burns can occur from touching hot parts.
14. Do not operate equipment with a damaged cord or if the equipment has been dropped or damaged – until a qualified serviceman has examined it.
15. Do not let cords hang over tables, benches or counters or come in contact with hot manifolds or moving fan blades.
16. If an extension cord is necessary, a cord with a current rating of two or more than that of the equipment should be used. Cords rated for less current than the equipment may overheat. Care should be taken to arrange the cord so that it will not be tripped over or pulled.
17. Always unplug the equipment from electrical outlet when not in use. Never use the cord to pull the plug from the outlet. Grasp plug and pull to disconnect.
18. Let equipment cool completely before pulling away. Loop cord loosely around equipment when storing.
19. To reduce the risk of fire, do not operate equipment in the vicinity of open containers of flammable liquids (gasoline).
20. Adequate ventilation should be provided when working on operating internal combustion engines.
21. Keep hair, loose clothing, fingers, and all parts of body way from moving parts.
22. To reduce the risk of electrical shock, do not use on wet surfaces or expose to rain.
23. Use only as described in this manual. Use only manufacturer's recommended attachments.
24. **ALWAYS WEAR SAFETY GLASSES**. Everyday eyeglasses have only impact resistant lenses, and they are NOT safety glasses.

SAVE THESE INSTRUCTIONS

The Automotive Lift Institute (ALI) is a trade association comprised of US and Canadian manufacturers and certain national distributors of automotive lifts. For almost 50 years, the ALI in cooperation with the American National Standards Institute (ANSI) has continued to sponsor the national standard ANSI/ALI ALCTV-1998 "Safety Requirements for Construction, Testing, and validation for Automotive Lifts."

The new "ALI/ETL Automotive Lift Certification Program" is based on ALI developed methods and criteria for third party testing of automotive lifts to validate conformance with ANSI/ALI ALCTV- 1998.

For automotive lifts to be certified, manufacturers must execute an agreement with the ALI and ETL / Intertek Testing Services and must meet certain requirements:

- Must be structurally tested in accordance with the test requirements as outlined in ANSI/ALI ALCTV- 1998.
- All motor operated units must be listed by a nationally recognized testing laboratory (NRTL) in accordance with ANSI/UL-201.
- The manufacturer's production facility must meet quality control requirements as set forth in the ANSI Z34.1-1987 and the ALI/ETL Automotive Lift Certification Program Procedural Guide.
- All manufacturer-provided instructions, manuals, and operator safety documents, must meet the requirements of the ANSI/ALI ALCTV–1998 and ANSI/UL-201.

Lifts meeting these rigid requirements may be listed in the directory of certified lifts and be labeled with the "ALI/ETL certification mark" (Above on right), and, if applicable, the ETL listing mark to ANSI/UL-201.

Mohawk has been a long-standing member of ALI and most of Mohawk's popular models are currently listed and certified. Other Mohawk models are in various stages of testing. To obtain a complete and current certification listing, contact Mohawk Resources Ltd. To obtain a copy of the current automotive lift standard, contact ALI or ANSI.

Some people purchase quality products and others do not. You are assured of quality when you purchase a Mohawk product in compliance with the certification program.

MOHAWK WARRANTIES

EFFECTIVE DATE: 4/14/2003

GENERAL WARRANTY INFORMATION:

MOHAWK'S OBLIGATION UNDER THIS WARRANTY IS LIMITED TO REPAIRING OR REPLACING ANY PART OR PARTS RETURNED TO THIS FACTORY, TRANSPORTATION CHARGES PREPAID, WHICH PROVE UPON INSPECTION TO BE DEFECTIVE AND WHICH HAVE NOT BEEN MISUSED. DAMAGE OR FAILURE TO ANY PART DUE TO FREIGHT DAMAGE OR FAULTY MAINTENANCE IS NOT COVERED UNDER THIS WARRANTY. THIS WARRANTY DOES NOT COVER ANY CONSEQUENTIAL OR INCIDENTAL DAMAGES INCLUDING, BUT NOT LIMITED TO, LOST REVENUES OR BUSINESS HARM. THIS EQUIPMENT HAS BEEN DESIGNED FOR USE IN NORMAL COMMERCIAL VEHICLE MAINTENANCE APPLICATIONS. A SPECIFIC INDIVIDUAL WARRANTY MUST BE ISSUED FOR UNITS THAT DEVIATE FROM INTENDED USAGE, SUCH AS HIGH CYCLE USAGE IN INDUSTRIAL APPLICATIONS, OR USAGE IN EXTREMELY ABUSIVE ENVIRONMENTS, ETC.. MOHAWK RESERVES THE RIGHT TO DECLINE RESPONSIBILITY WHEN REPAIRS HAVE BEEN MADE OR ATTEMPTED BY OTHERS. THIS WARRANTY DOES NOT COVER DOWNTIME EXPENSES INCURRED WHEN UNIT IS IN REPAIR. THE MODEL NAME AND SERIAL NUMBER OF THE EQUIPMENT MUST BE FURNISHED WITH ALL WARRANTY CLAIMS. THIS WARRANTY STATEMENT CONTAINS THE ENTIRE AGREEMENT BETWEEN MOHAWK RESOURCES LTD. AND THE PURCHASER UNLESS OTHERWISE SPECIFICALLY EXPRESSED IN WRITING. THIS NON-TRANSFERABLE WARRANTY APPLIES TO THE ORIGINAL PURCHASER ONLY. THIS WARRANTY IS APPLICABLE TO UNITS LOCATED ONLY IN THE UNITED STATES OF AMERICA AND CANADA. CONTACT MOHAWK RESOURCES LTD. FOR SPECIFIC WARRANTY PROVISIONS FOR UNITS LOCATED OUTSIDE OF THESE COUNTRIES.

5-YEAR WARRANTY:

THIS WARRANTY IS APPLICABLE TO THE FOLLOWING MOHAWK LIFTS ONLY: A-7, SYSTEM IA, SYSTEM IA-10, TOMAHAWK-9000, LMF-12, TP-15, TP-18, TP-20, TP-26, TP-30 AND STANDARD OPTIONS.

3-YEAR WARRANTY:

THIS WARRANTY IS APPLICABLE TO THE FOLLOWING MOHAWK LIFTS ONLY: TSL-7, PL-6000, TR-19, TR-25, FL-25, TR-33, TR-35, TR-40, TR-50, TR-60, TR-75, TR-110, MP-SERIES AND RP-SERIES MOBILE COLUMN LIFTS, SL-SERIES SCISSOR LIFTS, FP-SERIES LIGHT DUTY FOUR POST LIFTS, TL-SERIES LIFTS AND STANDARD OPTIONS.

2-YEAR WARRANTY:

THIS WARRANTY IS APPLICABLE TO THE FOLLOWING MOHAWK LIFTS ONLY: PARALLELOGRAM SERIES AND USL-6000 AND STANDARD OPTIONS.

1-YEAR WARRANTY:

THIS WARRANTY IS APPLICABLE TO THE FOLLOWING MOHAWK LIFTS ONLY: HR-6, TD-1000, CT-1000 AND STANDARD OPTIONS.

STRUCTURAL COMPONENTS:

ALL STRUCTURAL AND MECHANICAL COMPONENTS OF THIS UNIT ARE GUARANTEED FOR THE ABOVE STATED TIME FRAME, SPECIFIC TO MODEL, FROM THE DATE OF INVOICE, AGAINST DEFECTS IN WORKMANSHIP AND/OR MATERIALS WHEN LIFT IS INSTALLED AND USED ACCORDING TO SPECIFICATIONS.
SEE MOHAWK'S "*EXTENDED LIFETIME CYLINDER WARRANTY*" FOR SPECIFIC WARRANTY PROVISIONS FOR HYDRAULIC CYLINDERS. THE "*EXTENDED LIFETIME CYLINDER WARRANTY*" IS APPLICABLE TO THE FOLLOWING MOHAWK LIFTS ONLY: A-7, SYSTEM I, LMF-12, TP-15, TP-18, TP-20, TP-26, TP-30, MP-SERIES AND TL-SERIES LIFTS.

POWER UNIT:

ALL POWER UNIT COMPONENTS (MOTOR, PUMP AND RESERVOIR) ARE GUARANTEED FOR THE ABOVE STATED TIME FRAME, SPECIFIC TO MODEL, FROM THE DATE OF INVOICE, AGAINST DEFECTS IN WORKMANSHIP AND/OR MATERIALS WHEN THE LIFT IS INSTALLED AND USED ACCORDING TO SPECIFICATIONS.

ELECTRICAL COMPONENTS:

ALL ELECTRICAL COMPONENTS (EXCLUDING MOTOR) ARE GUARANTEED FOR ONE YEAR FOR PARTS ONLY (EXCLUDING LABOR), FROM THE DATE OF INVOICE, AGAINST DEFECTS IN WORKMANSHIP AND/OR MATERIALS WHEN THE LIFT IS INSTALLED AND USED ACCORDING TO SPECIFICATIONS.

PNEUMATIC (AIR) COMPONENTS:

ALL PNEUMATIC (AIR) COMPONENTS (I.E. AIR CYLINDERS AND POPPET AIR VALVES) ARE GUARANTEED FOR ONE YEAR FOR PARTS ONLY (EXCLUDING LABOR), FROM THE DATE OF INVOICE, AGAINST DEFECTS IN WORKMANSHIP AND/OR MATERIALS WHEN THE LIFT IS INSTALLED AND USED ACCORDING TO SPECIFICATIONS.

WARRANTY EXCEPTIONS:

ALL "SPECIAL" LIFTS AND/OR "CUSTOMIZED" OPTIONS ON THIS UNIT ARE GUARANTEED FOR ONE YEAR FOR PARTS ONLY (EXCLUDING LABOR), FROM THE DATE OF INVOICE, AGAINST DEFECTS IN WORKMANSHIP AND/OR MATERIALS WHEN THE LIFT IS INSTALLED AND USED ACCORDING TO SPECIFICATIONS.

THIS WARRANTY SUPERSEDES ALL OTHER WARRANTY POLICIES PREVIOUSLY STATED AND IN ALL OTHER MOHAWK PRODUCT SPECIFIC LITERATURE.

EXTENDED LIFETIME CYLINDER WARRANTY

AS THE ORIGINAL PURCHASER OF A MOHAWK LIFT MANUFACTURED BY MOHAWK RESOURCES, LTD. YOU ARE ENTITLED TO AN EXTENDED CYLINDER SEAL KIT REPAIR WARRANTY. TO QUALIFY FOR THIS WARRANTY, THE FOLLOWING CONDITIONS MUST BE MET:

- ALL LIFTS MUST BE REGISTERED WITH MOHAWK RESOURCES, LTD., P.O. BOX 110, 65 VROOMAN AVENUE, AMSTERDAM, NY 12010, WITH THE ORIGINAL CUSTOMER NAME, ADDRESS AND PHONE NUMBER, WITHIN 30 DAYS OF INSTALLATION.
  (PLEASE USE THE POSTAGE PAID WARRANTY REGISTRATION CARD ATTACHED TO THE FRONT OF THIS MANUAL.)

- ANY CYLINDER THAT IS PAST ITS NORMAL 5-YEAR WARRANTY PERIOD MUST BE SHIPPED FREIGHT PRE-PAID TO THE MOHAWK PLANT.

- UPON COMPLETION OF INSTALLING A COMPLETE SEAL KIT, MOHAWK WILL SHIP THE CYLINDER TO YOU, FREIGHT COLLECT.

- MOHAWK'S OBLIGATION UNDER THIS WARRANTY IS LIMITED TO REPAIRING ANY CYLINDER, WHICH UPON INSPECTION HAS NOT BEEN MISUSED. MOHAWK RESERVES THE RIGHT TO DECLINE RESPONSIBILITY WHEN THE REPAIRS HAVE BEEN MADE, OR ATTEMPTED BY OTHERS. THE FOREGOING CONTAINS THE ENTIRE AGREEMENT BETWEEN MOHAWK RESOURCES, LTD. AND THE PURCHASER, UNLESS SPECIFICALLY EXPRESSED IN WRITING. THIS WARRANTY IS NON-TRANSFERABLE AND RUNS TO THE ORIGINAL PURCHASER ONLY.

THIS IS NOT A "LEND A CYLINDER" POLICY. AS STATED ABOVE, YOUR ORIGINAL CYLINDER (WHEN OUT OF ITS ORIGINAL 5-YEAR WARRANTY) WILL HAVE ITS SEALS REPLACED, WITH ALL FREIGHT CHARGES THE RESPONSIBILITY OF YOU, THE CUSTOMER.

POWER SUPPLY FEED REQUIREMENTS

The power supply connection must comply with the following.

Disconnectable Cable Power Feed to Lift:
If using a plug with the flexible cable connection provided, a plug must be provided that is rated as shown in the table below for the particular model, voltage and phase of the equipment supplied. This plug must be of the NEMA locking type with a ground connection and must have UL, CSA or other equivalent listing. Consult the plug manufacturer's installation instructions for connecting the plug to the cable. Refer to the electrical schematics in this manual for the proper connection of the power supply to the lift. Refer below to wire color designations and proper selection of feed cable. Consult and adhere to all local and national codes applying to the installation and use of this product.

Wire Color Designations:

3 Phase:		*1 Phase:*	
Black:	L1	Black:	L1
Red:	L2	Red:	L2
White:	L3	White:	Neutral
Green:	Ground	Green:	Ground

Required Cable Specification:
All power feed cable to this lift must be of Type SO, SOOW, or SOW, rated 600 V, 90 Degree C. The maximum length of the main power feed cable and interconnection means (plugs) must not exceed 30 feet from the main post to the power feed box.

MOHAWK RESOURCES, LTD.
MP-18-AF SERIES
ELECTRICAL RATINGS:

MP-18-AF-4-72
8 HP - 60 HZ
☐ 208-230 VAC, 1 PHASE, 80 AMP
☐ 208-230 VAC, 3 PHASE, 44 AMP
☐ 460-480 VAC, 3 PHASE, 20 AMP

MP-18-AF-6-108
12 HP - 60 HZ
☐ 208-230 VAC, 1 PHASE, 120 AMP
☐ 208-230 VAC, 3 PHASE, 66 AMP
☐ 460-480 VAC, 3 PHASE, 30 AMP

OPTIONAL EQUIPMENT

If it is desired to raise the vehicle by the frame, this can be done by using crossbeams. The crossbeam fits into the cradle where the tire would normally fit. Refer to the ANSI standard "Vehicle Lift Points for Service Garage Lifting," ANSI/SAE J2184-Oct92 and the safety manual "Lifting if Right," ALI/SM93-1, for proper positioning of vehicles on lift.

Adaptors accommodate smaller wheel sizes, to prevent tires from slipping through the cradle.

Jack Stands support the vehicle in the raised position for maintenance or to permit using the lift for other vehicles.

Refer to the back of the manual for Crossbeams, Jack Stands, or Adaptors.

Special items such as Runways, or Adaptors are available on request to suit the application.

The standard mobile lift is suitable to lift wheeled vehicles by the tires. It can come in sets.

NOTE: SPECIAL ADAPTERS ARE REQUIRED FOR LIFTING OF LIMOUSINES, RVs, And LONG WHEELBASE VEHICLES ETC. CONSULT WITH LIFT DEALER FOR AVAILABILITY.

DESIGN AND CONSTRUCTION

Each column consists of a rigid frame of three-wheel design for maneuverability, lifting tire cradle, control panel, electro hydraulic power unit, and high-pressure cylinder.

Two of the wheels are in fixed position on the column base. The third wheel is steerable and hydraulically operated, permitting movement of the unloaded columns, but allowing the column to sit firmly on the floor before a load is applied.

The Master Column accepts the incoming electrical supply to the Master Column Panel and has electrical outlets for the remaining slave columns.

When the cradle is raised or lowered in the “synchronized” mode the actual movement of each cradle is measured and recorded in the computer. If the movement of any cradle exceeds that of any other cradle by more than 1 1/2”, the cradle is stopped until the others catch up.

The main controls are housed at the Master Column, including the number of pairs of columns to be controlled in the synchronized mode.

A hydraulic cylinder, powered by an electro hydraulic pump unit, controls the cradle movement. There is an internal relief valve on the pump unit, which prevents overloading of the cradle.

A separate automatically engaging back up mechanical safety lock latch prevents lowering of the cradle in the event of failure of the hydraulic system.

All movement controls are of the “deadman” type which are operable only as long as the operator is depressing the button. As soon as the button is released the motion will stop.

All columns have controls for synchronized or individual column movement, plus an “Emergency Stop”.

Depressing the Emergency Stop button will stop all columns immediately and will not permit any column movement until the depressed button is reset.

A separate selector switch on the main panel permits synchronized lifting of all columns or appropriate paired columns.

OPERATING THE MOBILE LIFT

THOROUGHLY READ THIS SECTION BEFORE OPERATING THE LIFT. IF YOU HAVE ANY QUESTIONS GET THEM ANSWERED BEFORE PROCEEDING.

1. Be sure that the floor is strong enough to support the lift before operating. Do not use the lift on asphalt surfaces, as the lift will sink if the vehicle is on the lift for any extended period of time.

2. Be sure that the surface of the floor is relatively flat. If there is a slope of more than 3 degrees (1 inch in 20") do not operate the lift.

3. Be sure that you have enough headroom to raise the vehicle without the top of the vehicle coming in contact with any obstruction.

4. Drive the vehicle to the working spot.

5. Push the cradle of the lift under each tire. Be sure to push it in as far as possible. The wheel rim should be larger than the opening in the cradle.

6. Connect the cables from the slave columns to the main column control box. Check to make sure that the rear right column is connected to the rear right outlet etc. for each column.

7. Connect the main column power.

8. Turn on the main switch to the lift. Turn power switch to #1 position on the Main Control Panel. The orange light must light up. If it doesn't, check that the red "EMERGENCY STOP" buttons are not depressed, by turning the button clockwise to release the catch. If the orange light still does not light, check to be sure that there is power to the lift, have trained personnel (electrician) inspect power supply panels. All controls are in the main panel and should be checked by trained personnel only.

9. **RAISING ALL WHEELS**

   In order to raise all columns together, check that the selector switch (E) on the master column is in the "all" position. Press the button with the up arrow (A) to raise the lift. Keep the pressure on the bottom until the vehicle is set to the desired position. If necessary, use a second person to observe the area not seen by the operator.

10. On each hydraulic pump solenoid dump valve override (hex key) which must be in lock position.

11. Manual override on solenoid lowering valve allows to lower the unit in case of power failure, by moving lock latch handle on the back of the column to off position and turning the hex key counter clockwise. Only designed personnel should perform the operation.

12. **LOWERING ALL WHEELS**

To lower all wheels together check that the Master Column Selector Switch (E) is in the "all" position. Press the button with the down arrow (F). The cradle on all columns will rise slightly to ensure that the secondary lock latch is clear, and then all cradles will lower. Keep the pressure on the down button (F) until the vehicle is down to the desired position.

13. **PAIR OPERATION**

To raise or lower a pair of wheels check that the selector switch (E) on the Master Column is set to the appropriate pair of wheels. Move to one of the columns of that pair, and proceed to raise or lower the wheels as outlined above.

NOTE: Be sure that the set of wheels on the ground is free to move as the effective distance between the front and rear wheels becomes less as one pair of wheels is higher or lower than the other pair. Keep the height difference between pairs as low as practical.

14. **SINGLE WHEEL OPERATION**

To raise or lower a single wheel move to the column Control Panel for that wheel. Press and hold the "Manual" button (B). Press the appropriate "up" (A) or "down" (F) button and hold it until the desired position is reached.

BE VERY CAREFUL WHEN DOING THIS OPERATION THAT THE VEHICLE REMAINS STABLE AND THAT THE SIDE OF THE VEHICLE DOES NOT COME IN CONTACT WITH THE COLUMN.

NOTE: If the "Manual" button (B) is released while the "up" (A) or "down" (F) button is still pressed the hoist will operate in the synchronized mode "all" or "pairs" as determined by the selector switch (E) on the main panel.

MAINTENANCE INSTRUCTIONS

1. There are no bearings or seals which require regular or frequent lubrication. The column sections where the cradle carriage slider blocks ride should be greased once a year using a high-pressure grease.

2. Daily, or whenever the hoist is used after any extended down time, the power supply and interconnecting cables should be checked to make sure that there are no nicks or cuts which may reduce the insulation. Also, check visually the hydraulic hose connections for leaks and tighten or repair as necessary.

3. The hydraulic fluid should be changed once every two years using a good quality ISO32 HYDRAULIC OIL. It is necessary only to drain the reservoir tank when the cradle is in the lowered position. Add 3US Gal. (12 litres).

4. Every three months check and re-tighten bolts on wheels, power unit and carriage lock rack attachment. Apply a light coating of grease to the column rails front and rear.

5. In case of electrical break down have qualified service personnel service the lift using provided electrical diagram as shown in the manual.

6. Always refer to Operation manual when operating lift.

7. Call your Distributor or Factory direct if you have any questions with regards to operating the lift.

8. The visual inspection of the latches on the master column can be done manually by using a small hand mirror.

Note: ONLY TRAINED LIFT SERVICE PERSONNEL IS PERMITTED TO REPLACE WORN OR BROKEN PARTS.

TROUBLE SHOOTING GUIDE

Measure of Carriage Movement

There is a proximity sensor mounted on the back of the column, which senses the movement of the carriage.
You can observe the lift flashes of the proximity sensor as the columns rise in the synchronized mode. Each flash is recorded as an electrical pulse in the computer. The proximity sensor detects holes in a metal disk drive driven by a timing belt.

Operation of Synchronized Lifting or Lowering

The height of the carriage above floor level is measured and compared to the other carriages by the computer located in the main control box. If any one-carriage movement is more than 1 1/2" greater than the slowest carriage, the fastest one stops to allow the slowest one to catch up.
If you turn off the unit, or press the Emergency Stop button, the computer position for each column is reset to believe that all columns are the same height, and the columns are now synchronized from this new starting position.

Problem: The height difference between carriages is greater than 1-1/2".

Solution: If the difference in height of any column is more than 1-1/2" it may be that the proximity sensor is too far away from the disk to read properly. When the unit is in the Synchronized Raise mode, the blinking of the proximity sensor should be at the uniform rate unless the carriage is stopped. If this is not happening, the sensor needs to be moved closer to the metal strip. **THIS IS A SENSITIVE ADJUSTMENT AND GREAT CARE SHOULD BE TAKEN TO ENSURE THAT THE SENSOR IS NOT MOVED TOO FAR FORWARD. Clearance between the disk and the sensor should be between .030" and .060". Do not advance the sensor more than ½ turn at a time. If you go too far, you will damage the sensor.**

Problem: Power is on, however lift will not Raise or Lower.

Solution: If any one of the Emergency Stop Buttons is depressed, none of the units will operate. Check that all Buttons are out by rotating the knob clockwise, approximately 20 degrees. It should come out approximately ¼, if it was depressed.

Problem: The power unit is operating; however, the carriage will not lift the road.

Solution: Check the axle weight of the vehicle. If it is exceeds the capacity of the lift, the Hydraulic Relief Valve operates preventing lift overload. If the weight is within limits, there may be a need for a new Relief Valve. Contact the distributor for a new Relief Valve.

Problem: Carriage is lowering on its own.

Solution: Check that there are no oil leaks by checking around the column. If so, repair the leak condition.

The lowering valve, located on the Power Unit may have collected some dirt, preventing it from sealing properly. Make sure that the carriage is lowered to floor level in order that there is no pressure in the system. Disconnect the power so that no one can start the unit. You can now remove the lowering valve. Disconnect the electrical leads from the solenoid using a screwdriver to remove the screw holding the two mating connectors. Remove the lowering valve from the Power Unit and check to see that there is no foreign material in the valve end, which prevents the ball from sealing. Remove the foreign material. If you cannot find any problem, replace the valve.

Problem: There is more than 1-1/2" height difference between carriages.

Solution: This may be due to the fact that one column was operated on manual before operating the unit in the "Synchronized" mode.

This may also be due to operating in the "Pairs" mode before operating in "Synchronized" mode.

The Proximity sensor may be set too far back from the sensing strip. Lower the unit to floor level using individual column controls if necessary.

EXPLANATION OF OPERATION OF COMPUTER SYSTEM

1. **NOTE FOR FIRST TIME USE OR IF THE LIFT HAS BEEN MOVED TO A DIFFERENT SHOP:**

   Check that the Supply Voltage, Phase, and frequency (Hertz) are the same as listed on the nameplate of the lift.
   IF IT IS NOT THE SAME, DO NOT CONNECT THE LIFT. **CONTACT THE DISTRIBUTOR TO DETERMINE THE APPROPRIATE ACTIONS.**
   It is possible to accommodate a different Voltage through the use of a Three Phase Transformer.
   If the supply voltage is Single Phase and has sufficient capacity, it is possible to use a converter from Single Phase to Three Phase power.
   The unit will operate with either 50 or 60 Hertz, however there may be a difference in supply Voltage. Contact the distributor if there are any concerns.

2. Choose a hard lever surface, preferably concrete. Asphalt surfaces are not recommended because they may become unstable and allow the lift to sink if the vehicle is lifted for any extended period of time.

   It if is necessary to use the lift on an asphalt surface, it is recommended to use a steel plate, a minimum thickness of 3/8" (8mm) which extends a minimum of 6" on all sides beyond the support points of the base of the lift. This will minimize sinking effect if the vehicle is raised for an extended period of time.

3. Do not drive the vehicle over the cables of the lift. The cables should be arranged in a "U" shape or the cables should be disconnected before moving the vehicle.

4. Be sure that the lift is in the "ALL" mode, not "PAIRS" when lifting the vehicle.

5. Check that there is enough height and no overhead obstructions in the building area where you will be lifting the vehicle. If necessary, measure the lowest point to determine how high you can raise the vehicle.

6. Push the column forward such that the forks are as close to the tire as possible before lifting the vehicle.

ELECTRICAL CONNECTION

IMPORTANT:

It is user's responsibility to provide all wiring for electrical hook-up prior to installation and to insure that the electrical installation conforms to local building codes. Where required, it is the user responsibility to provide an electrical isolation switch located in close proximity to the lift that will enable emergency stop capability and isolate electrical power from the lift for any servicing requirements.

IMPORTANT SAFETY INSTRUCTIONS

When using your garage equipment, basic safety precautions should always be followed, including the following:

1. Read all instructions

2. Care must be taken as bums can occur from touching hot parts.

3. Do not operate equipment with a damaged cord or if the equipment has bee dropped or damaged - until it has been examined by a qualified serviceman.

4. Do not let cord hang, over edge of table, bench or counter or come in contact with hot manifolds or moving fan blades.

5. If an extension cord is necessary, a cord with a current rating equal to or more than that of the equipment should be used. Cords rated for less than the equipment may overheat. Care should be taken to arrange the cord so that it will not be tripped over or pulled.

6. Always unplug equipment from electrical outlet when not in use. Never use the cord to pull the plug from the outlet. Grasp plug and pull to disconnect.

AUTOMOTIVE LIFT SAFETY TIPS

Post these safety tips where they will be constant reminder to your lift operator.
For information specification to the lift, always refer to the lift manufacturer's manual

1. Inspects your lift daily. Never operates if it malfunctions or if it has broken or damaged parts. Repairs should be made with original equipment parts.
2. Operating controls are designed to close when released. Do not block open or override them.
3. Never overload your lift. Manufacturers rated capacity is shown on nameplate affixed to the lift.
4. Positioning of the vehicle and operation of the lift should be done only by trained and authorized personnel.
5. Never raise vehicle with anyone inside it. Customers or bystanders should not be in the lift. During operation.
6. Always keep lift area free of obstructions, grease, while, trash and other debris.
7. Before driving vehicle over lift, position arms and supports to provide unobstructed clearance. Do not hits or run over the lift arms, adapters, or axle supports. This could damage the lift or vehicle.
8. Load vehicle on lift carefully. Positioning lift supports to contact at the vehicle manufacturers recommended lifting points. Raise lift until supports contact the vehicle. Check supports for secure contact with vehicle. Raise lift the desired working heights. CAUTION: if you are working under the vehicle, lift should be raised high enough for locking device to be engaged.
9. Note that with some vehicles, the removal (or installation) of components may cause a critical shift in the centre of gravity and results in raised vehicle instability. Refer to the vehicle manufacturers service manual for recommended procedures when vehicle components are removed.
10. Before lowering lift, be sure cool trays, stands, etc. are removed from under the vehicle. Release locking devices before attempting to lower lift.
11. Before removing vehicle from lift area, position lift arms and supports to provide and unobstructed exit (refer back to No. 7)

These "Safety Tips" along with "Lifting it Right" a general lift safety manual, are presented as an industry service by the Automotive Lift Institute. For more information on this topic, writes to ALI, P.O. Box 33116, Indialantic, FL 32903-3116

MOHAWK

ILLUSTRATIONS

MP-18-AF-SERIES

ELECTRIC/HYDRAULIC PORTABLE LIFT

4 & 6 POST ARRANGEMENTS

REV.	DESCRIPTION	DATE	BY	APP'D.
△				

CAPACITY PER COLUMN - 18,000 lbs
LIFTING HEIGHT UP TO 67"
LIFTING SPEED - 66 seconds
ELECTRIC/HYDRAULIC SYSTEM
AUTOMATIC MULTI-POSITION MECHANICAL LOCK
HYD. OPERATED THIRD WHEEL
ADJUSTABLE FORKS (13" TO 23-1/2" INSIDE)

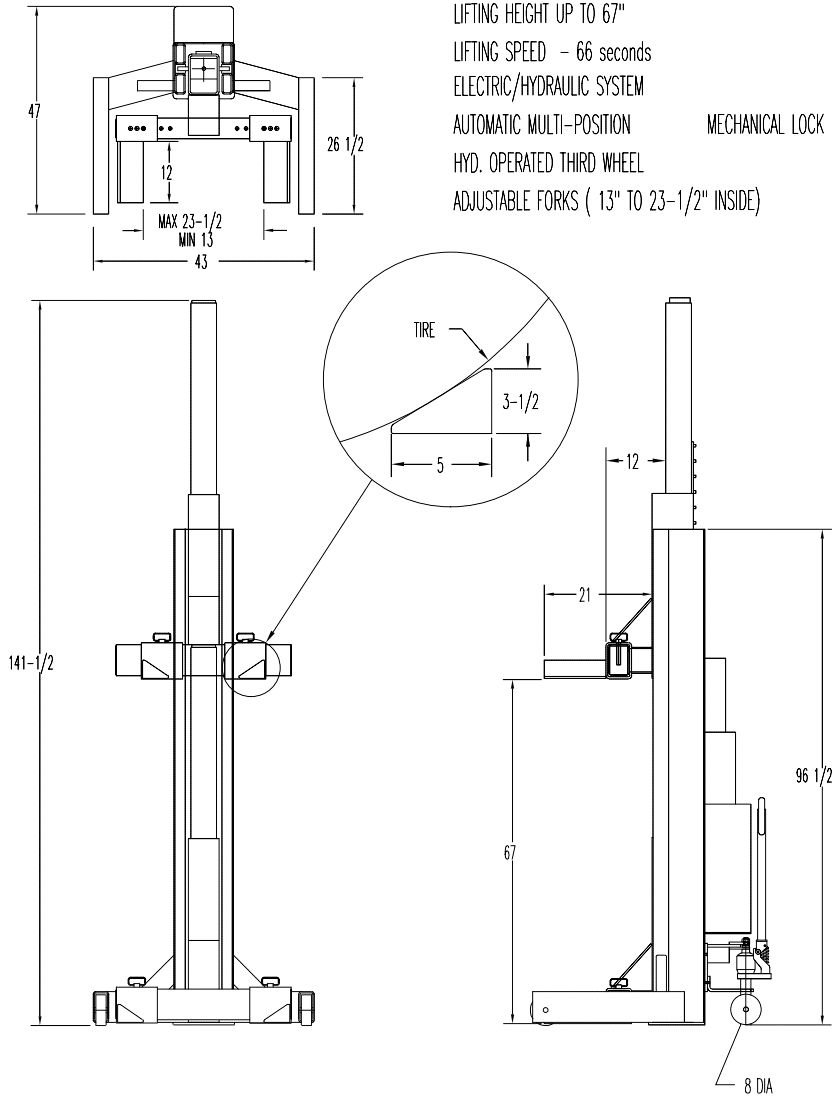

MOBILE LIFT COLUMN
MODEL: MP-18-AF

C -SIZE

NOTICE OF CONFIDENTIAL INFORMATION

INFORMATION CONTAINED HEREIN IS CONFIDENTIAL AND PROPERTY OF MOHAWK RESOURCES LTD.. WHERE DRAWING IS FURNISHED TO OTHERS IT SHALL BE USED SOLELY FOR PURPOSES OF INSPECTION, INSTALLATION, OR MAINTENANCE. THE INFORMATION SHALL NOT BE USED OR DISCLOSED BY THE RECIPIENT FOR ANY OTHER PURPOSES WHATSOEVER.

NOTES:
1. REMOVE ALL SHARP CORNERS & EDGES.
2. UNLESS OTHERWISE SPECIFIED, SURFACE FINISH TO BE 125 RMS.
3. WELDING MEDIUM SHALL CONFORM TO AWS SPECIFICATIONS TO E-70XX ELECTRODES OR E-70T1 CODE 5.3 FLUX CORE WIRE ONLY.

TOLERANCES:
ANGULAR 1 °
FRACTIONAL .030
DECIMAL:
0.XX .030
0.XXX .005

FILE NAME MP-18-AF-SPECS

MP-18-AF-XXX
NEXT ASSEMBLY

SCALE	DRAWN	MOHAWK RESOURCES LTD.	
1=1	R.V.		
CHECKED	APPROVED	TITLE MP-18-AF SPECS	
DATE 1/01	WEIGHT LB.	FROM N/A	DRAWING NUMBER MP-18-AF-SPECS △

REV.	DESCRIPTION	DATE	BY	APP'D.
△				

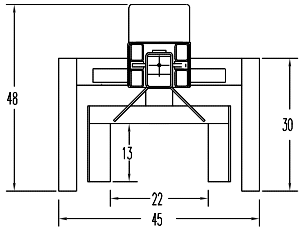

CAPACITY PER COLUMN - 24,000 lbs
LIFTING HEIGHT UP TO 67"
LIFTING SPEED ~90 seconds
ELECTRIC/HYDRAULIC SYSTEM
AUTOMATIC MULTI-POSITION MECHANICAL LOCK
HYD. OPERATED THIRD WHEEL

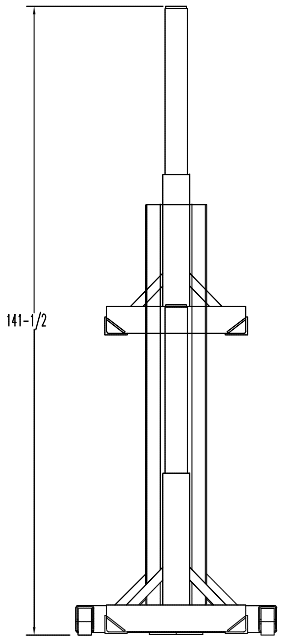

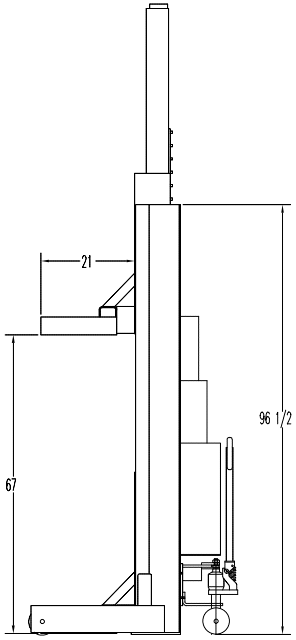

MOBILE LIFT COLUMN
MODEL: MP-24

C -SIZE

NOTICE OF CONFIDENTIAL INFORMATION

INFORMATION CONTAINED HEREIN IS CONFIDENTIAL AND PROPERTY OF MOHAWK RESOURCES LTD., WHERE DRAWING IS FURNISHED TO OTHERS IT SHALL BE USED SOLELY FOR PURPOSES OF INSPECTION, INSTALLATION, OR MAINTENANCE. THE INFORMATION SHALL NOT BE USED OR DISCLOSED BY THE RECIPIENT FOR ANY OTHER PURPOSES WHATSOEVER.

NOTES:
1. REMOVE ALL SHARP CORNERS & EDGES.
2. UNLESS OTHERWISE SPECIFIED, SURFACE FINISH TO BE 125 RMS.
3. WELDING MEDIUM SHALL CONFORM TO AWS SPECIFICATIONS TO E-70XX ELECTRODES OR E-7071 CODE 5.3 FLUX CORE WIRE ONLY.

TOLERANCES:
ANGULAR 1 °
FRACTIONAL .030
DECIMAL:
0.XX .030
0.XXX .005

FILE NAME MP-24 SPEC

MP-24-XXX

NEXT ASSEMBLY

SCALE	DRAWN	MOHAWK RESOURCES LTD.	
NONE	R.V.		
CHECKED	APPROVED	TITLE MP-24 SPECS	
DATE 1/01	WEIGHT LB.	FROM	DRAWING NUMBER MP-24 SPEC △

REV.	DESCRIPTION	DATE	BY	APP'D.
△				

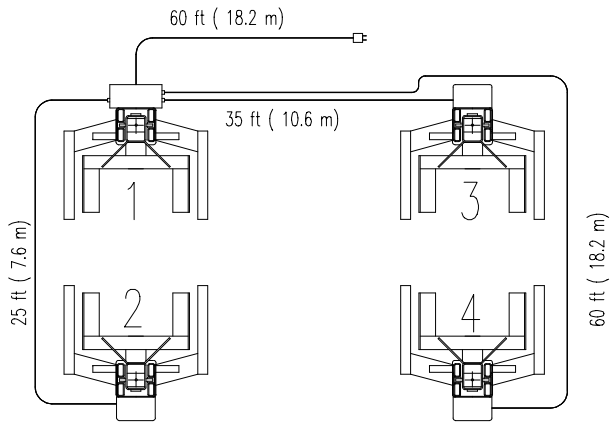

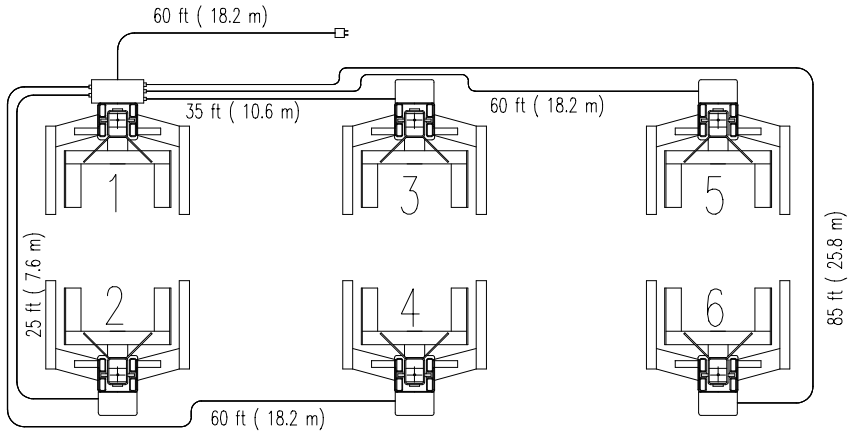

MP-18 & MP-24
COLUMN CABLE CONNECTION
SET OF 4, 6 COLUMNS

C -SIZE

NOTICE OF CONFIDENTIAL INFORMATION

INFORMATION CONTAINED HEREIN IS CONFIDENTIAL AND PROPERTY OF MOHAWK RESOURCES LTD. WHERE DRAWING IS FURNISHED TO OTHERS IT SHALL BE USED SOLELY FOR PURPOSES OF INSPECTION, INSTALLATION, OR MAINTENANCE. THE INFORMATION SHALL NOT BE USED OR DISCLOSED BY THE RECIPIENT FOR ANY OTHER PURPOSES WHATSOEVER.

NOTES:
1. REMOVE ALL SHARP CORNERS & EDGES.
2. UNLESS OTHERWISE SPECIFIED, SURFACE FINISH TO BE 125 RMS.
3. WELDING MEDIUM SHALL CONFORM TO AWS SPECIFICATIONS TO E-70XX ELECTRODES OR E-7011 CODE 5.3 FLUX CORE WIRE ONLY.

TOLERANCES:
ANGULAR 1 °
FRACTIONAL .030
DECIMAL:
0.XX .030
0.XXX .005

FILE NAME: MP-24 ASS'Y

MP-18-XXX | MP-24-XXX

NEXT ASSEMBLY

SCALE: NONE	DRAWN: R.V.	MOHAWK RESOURCES LTD.	
CHECKED	APPROVED	TITLE: COLUMN CABLE CONNECTION	
DATE: 1/01	WEIGHT: LB.	FROM	DRAWING NUMBER: MP-24 ASS'Y

REV.	DESCRIPTION	DATE	BY	APP'D.
△				

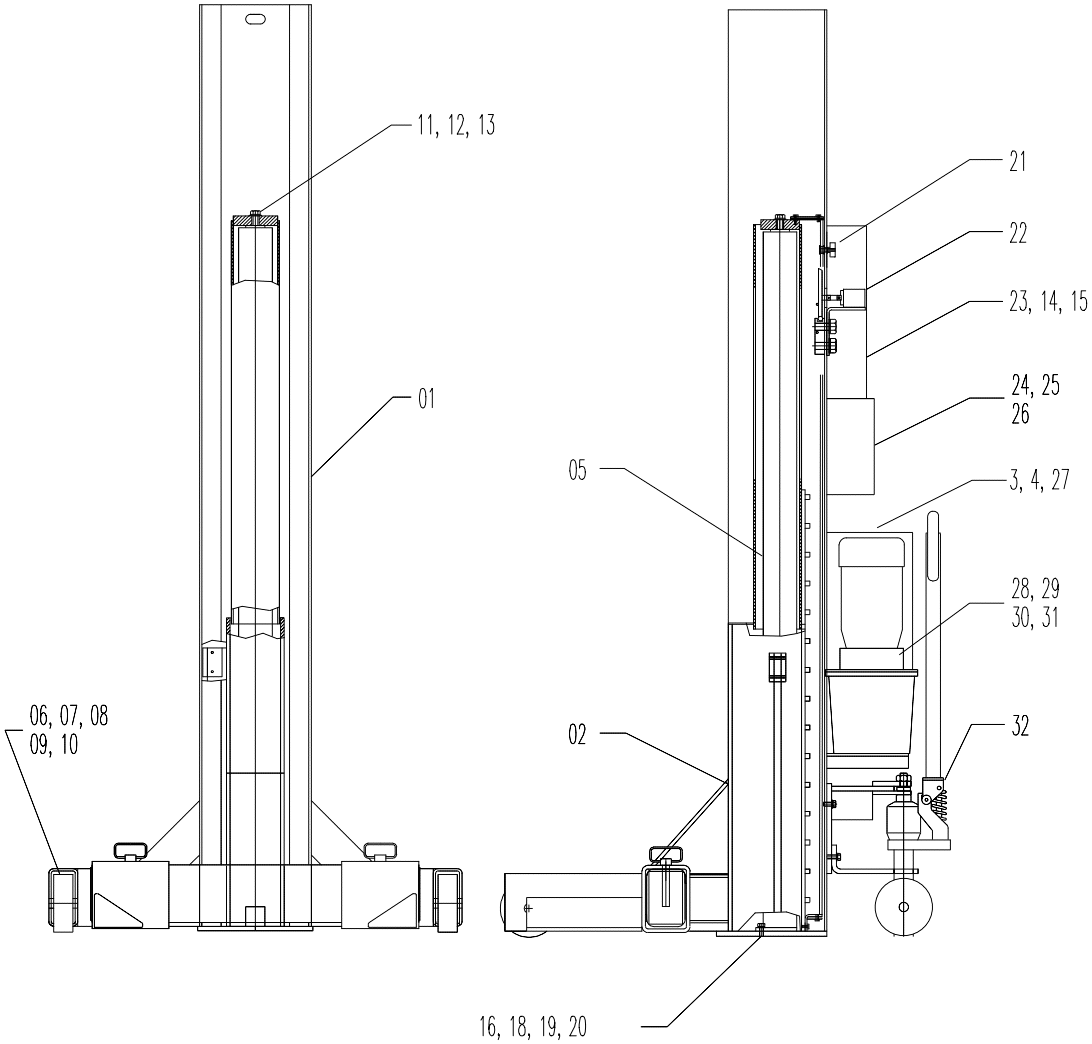

ITEM	QTY.	PART NO.	DESCRIPTION
01	1	MP17110	COLUMN WELDMENT
02	1	MP18AF200	CARRIAGE ASSY
03	1	MP17410	P/U COVER (SLAVE)
04	2	HSM8,25	SET SCREW M8 25MM LG
05	1	MP17610	HYD. CYLINDER
06	2	MP17010	WHEEL 6X2
07	2	MP17011	SHAFT
08	4	BU1125,00625	BRONZE BUSHING 1-1/8X1 2LG
09	2	HB0250,075	BOLT 1/4NC 3/4 LG
10	2	HLW0250	1/4 LOCK WASHER
11	1	HB050,150	BOLT 1/2NC 1-1/2 LG
12	1	HW050	1/2 WASHER
13	1	SP0750,0050	-1-1/8 LG PIPE 3/4OD, 0.050WALL
14	1	MP17414	M/B LATCH COVER
15	4	HB0250,050	BOLT 1/4 NC 1/2 LG
16	4	HW0250	WASHER 1/4
17	2	SP050,0050	-1/2 LG PIPE 1/2 OD, 0.050 WALL
18	2	HB0375,100	BOLT 3/8NC 1" LG
19	2	HW0375	WASHER 3/8
20	2	HLW0375	LOCK WASHER 3/8
21	1	MP17710	COUNTING MECHANISM ASSY
22	1	MP17300	LOCK LATCH ASSY
23	1	MP17411	LATCH COVER
24	1	XXX	CONTROL BOX
25	4	HS0375,0750	SETSCREW 3/8NC 3/4 LG
26	4	HW0375	WASHER 3/8
27	1	MP17410	P/U COVER (MASTER)
28	1	HYP	POWER UNIT
29	1	HYH0250,50	HYD. HOSE 1/4ID, 50" LG
30	2	HYFE6,4	HYD. FITTING (ELBOW#6SAETO#6JIC)
31	1	HYF6	VELOCITY FUSE
32	1	MP17510	HYD. THIRD WHEEL ASSY

C -SIZE

NOTICE OF CONFIDENTIAL INFORMATION

INFORMATION CONTAINED HEREIN IS CONFIDENTIAL AND PROPERTY OF MOHAWK RESOURCES LTD., WHERE DRAWING IS FURNISHED TO OTHERS IT SHALL BE USED SOLELY FOR PURPOSES OF INSPECTION, INSTALLATION, OR MAINTENANCE. THE INFORMATION SHALL NOT BE USED OR DISCLOSED BY THE RECIPIENT FOR ANY OTHER PURPOSES WHATSOEVER.

NOTES:
1. REMOVE ALL SHARP CORNERS & EDGES.
2. UNLESS OTHERWISE SPECIFIED, SURFACE FINISH TO BE 125 RMS.
3. WELDING MEDIUM SHALL CONFORM TO AWS SPECIFICATIONS TO E-70XX ELECTRODES OR E-7071 CODE 5.3 FLUX CORE WIRE ONLY.

TOLERANCES:
ANGULAR ±1°
FRACTIONAL .030
DECIMAL:
0.XX .030
0.XXX .005

FILE NAME MP-18-AF-PARTS

MP-18-AF-XXX
NEXT ASSEMBLY

SCALE	DRAWN	MOHAWK RESOURCES LTD.	
NONE	R.V.		
CHECKED	APPROVED	TITLE MP-18-AF-PARTS	
DATE 1/01	WEIGHT LB.	FROM	DRAWING NUMBER MP-18-AF-PARTS

REV.	DESCRIPTION	DATE	BY	APP'D.

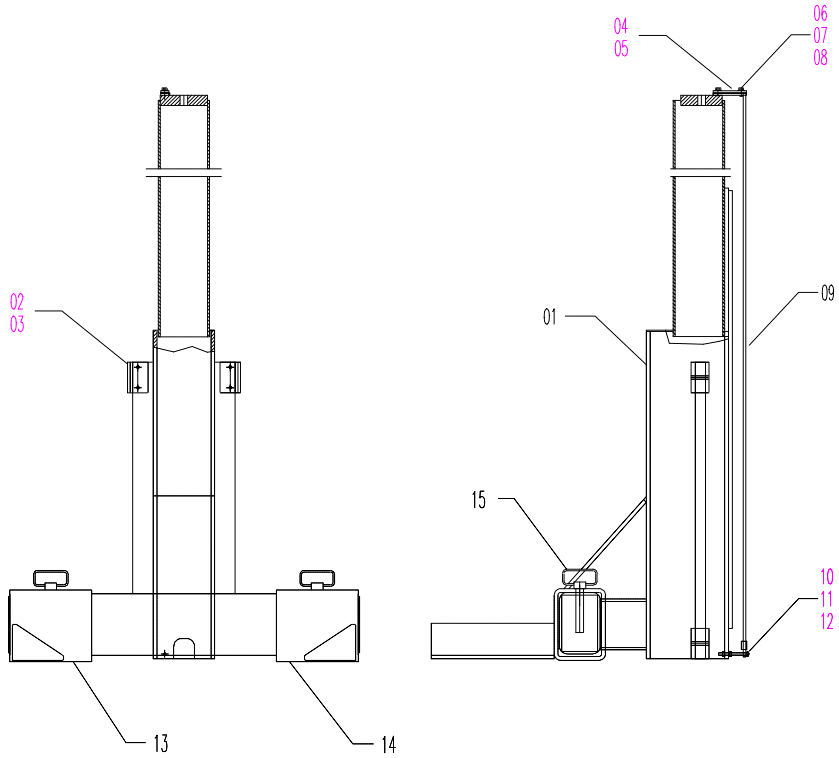

ITEM	QTY.	PART NO.	DESCRIPTION	MAT.	
01	1	MP18AF210	CARRAGE WELDMENT		A
02	4	MP17212	BEARING SHOE		A
03	8	HSP250,150	SPRING PIN 1/4 X 1 1/2		P
04	1	MP17213	TOP BELT BRACKET-1		A
05	1	MP17214	TOP BELT BRACKET-2		A
06	4	HB0250,075	HEX BOLT 1/4NC 3/4 LG		P
07	4	HW0250	WASHER 1/4		P
08	4	HLW0250	LOCK WASHER 1/4		P
09	1	MSC010	TIMING BELT 1/4 74" LG		P
10	1	HS0250,275	MACHINE SCREW 1/4NC 2-3/4LG		P
11	1	MSC011	BELT CLAMP		P
12	2	HN0250	HEX NUT 1/4NC		P
13	1	MP18AF230	ADJ. FORK LH.		B
14	1	MP18AF232	ADJ. FORK RH.		B
15	1	MSC012	ADJ. FORK PIN		P

C -SIZE

NOTICE OF CONFIDENTIAL INFORMATION

INFORMATION CONTAINED HEREIN IS CONFIDENTIAL AND PROPERTY OF MOHAWK RESOURCES LTD., WHERE DRAWING IS FURNISHED TO OTHERS IT SHALL BE USED SOLELY FOR PURPOSES OF INSPECTION, INSTALLATION, OR MAINTENANCE. THE INFORMATION SHALL NOT BE USED OR DISCLOSED BY THE RECIPIENT FOR ANY OTHER PURPOSES WHATSOEVER.

NOTES:
1. REMOVE ALL SHARP CORNERS & EDGES.
2. UNLESS OTHERWISE SPECIFIED, SURFACE FINISH TO BE 125 RMS.
3. WELDING MEDIUM SHALL CONFORM TO AWS SPECIFICATIONS TO E-70XX ELECTRODES OR E-70T1 CODE 5.3 FLUX CORE WIRE ONLY.

TOLERANCES:
ANGULAR 1 °
FRACTIONAL .030
DECIMAL:
0.XX .030
0.XXX .005

FILE NAME MP18AF200

MP-18-AF-XXX

NEXT ASSEMBLY

SCALE	DRAWN	MOHAWK RESOURCES LTD.	
NONE	R.V.		
CHECKED	APPROVED	TITLE MP-18-AF CARRIAGE ASSEMBLY	
DATE 1/01	WEIGHT LB.	FROM	DRAWING NUMBER MP18AF200

REV.	DESCRIPTION	DATE	BY	APP'D.
△				

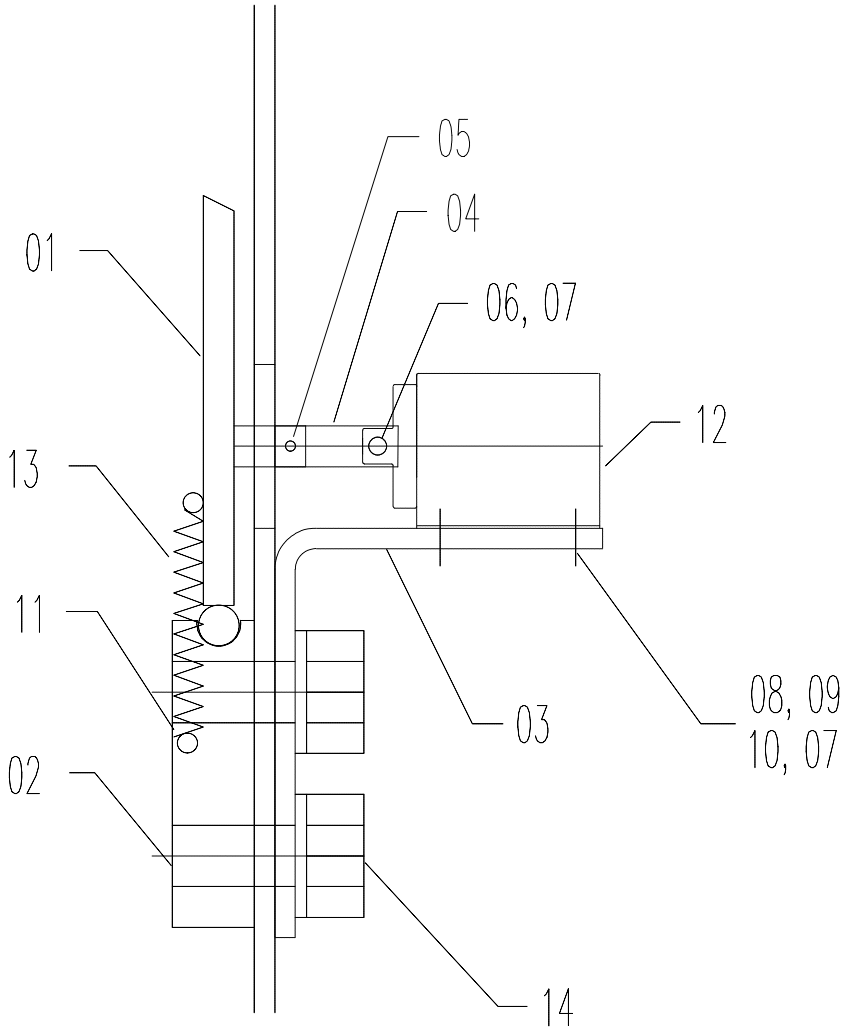

ITEM	QTY.	PART NO.	DESCRIPTION	MATERIAL	
01	1	MP17310	LATCH		A
02	1	MP17311	LATCH BASE		A
03	1	MP17313	SOLENOID BRACKET		A
04	1	MP17312	SOL. LINK		A
05	1	HSP125,050	SPRING PIN 1/8 1/2 LG		P
06	1	HS08,200	SCREW #8 2" LG	GR 5	P
07	5	HN08	HEX NUT #8		P
08	4	HS03,075	SCREW #8 3/4" LG		P
09	8	HW08	WASHER #8		P
10	5	HLW08	LOCK WASHER #8		P
11	2	HS10,075	SCREW #10 3/4" LG		P
12	1	MSC020	SOLENOID		P
13	2	MSC030	SPRING		P
14	2	HB075,150	BOLT 3/4NC 1-1/2 LG	GR 8	P
15	2	HLW075	LOCK WASHER 3/4		P

C -SIZE

NOTICE OF CONFIDENTIAL INFORMATION

INFORMATION CONTAINED HEREIN IS CONFIDENTIAL AND PROPERTY OF MOHAWK RESOURCES LTD., WHERE DRAWING IS FURNISHED TO OTHERS IT SHALL BE USED SOLELY FOR PURPOSES OF INSPECTION, INSTALLATION, OR MAINTENANCE. THE INFORMATION SHALL NOT BE USED OR DISCLOSED BY THE RECIPIENT FOR ANY OTHER PURPOSES WHATSOEVER.

NOTES:
1. REMOVE ALL SHARP CORNERS & EDGES.
2. UNLESS OTHERWISE SPECIFIED, SURFACE FINISH TO BE 125 RMS.
3. WELDING MEDIUM SHALL CONFORM TO AWS SPECIFICATIONS TO E-70XX ELECTRODES OR E-7011 CODE 5.3 FLUX CORE WIRE ONLY.

TOLERANCES:
ANGULAR 1 °
FRACTIONAL .030
DECIMAL:
0.XX .030
0.XXX .005

FILE NAME MP17300

MP17XXX

NEXT ASSEMBLY

SCALE	DRAWN	MOHAWK RESOURCES LTD.	
1=1	R.V.		
CHECKED	APPROVED	TITLE LOCK LATCH ASSY	
DATE 2/00	WEIGHT LB.	FROM N/A	DRAWING NUMBER MP17300 △

REV.	DESCRIPTION	DATE	BY	APP'D.
△				

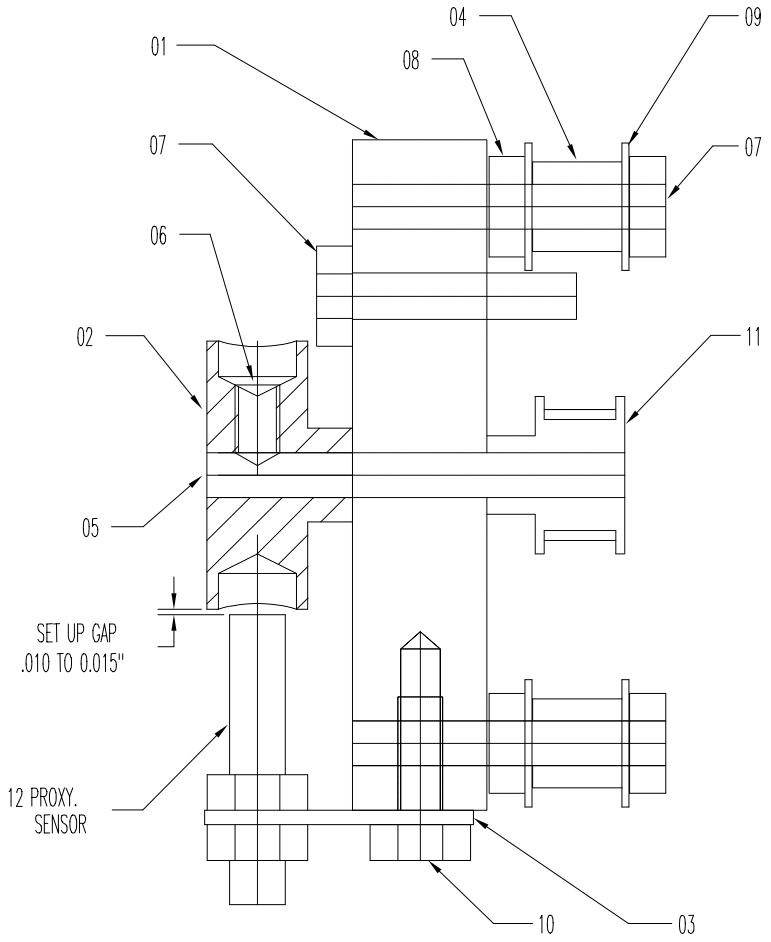

ITEM	QTY.	PART NO.	DESCRIPTION	MATERIAL	
01	1	MP17711	PROXY. SENSOR BLOCK	UHMW	A
02	1	MP17712	COUNTING WHEEL	1020	A
03	1	MP17713	PROXY. SENSOR BRACKET	1020	A
04	2	MP17714	ROLLER	1020	A
05	1	SRB0250SS	-2-1/4" LG 1/4 DIA COLD ROLLED SS BAR	1020	M
06	1	HS0250,0375	SET SCREW 1/4-20NC 3/8"LG		P
07	4	HB0250,1250	BOLT 1/4-20NC 1-1/4" LG		P
08	2	HN0250	HEX NUT 1/4-20NC		P
09	6	HW0250	WASHER 1/4		P
10	2	HB0250.050	BOLT 1/4-20NC 1/2" LG		P
11	1	MSC060	PULLEY		P
13	1	MSC070	PROXIMITY SENSOR		P

C -SIZE

NOTICE OF CONFIDENTIAL INFORMATION

INFORMATION CONTAINED HEREIN IS CONFIDENTIAL AND PROPERTY OF MOHAWK RESOURCES LTD. WHERE DRAWING IS FURNISHED TO OTHERS IT SHALL BE USED SOLELY FOR PURPOSES OF INSPECTION, INSTALLATION, OR MAINTENANCE. THE INFORMATION SHALL NOT BE USED OR DISCLOSED BY THE RECIPIENT FOR ANY OTHER PURPOSES WHATSOEVER.

NOTES:
1. REMOVE ALL SHARP CORNERS & EDGES.
2. UNLESS OTHERWISE SPECIFIED, SURFACE FINISH TO BE 125 RMS.
3. WELDING MEDIUM SHALL CONFORM TO AWS SPECIFICATIONS TO E-70XX ELECTRODES OR E-70T1 CODE 5.3 FLUX CORE WIRE ONLY.

TOLERANCES:
ANGULAR 1 °
FRACTIONAL .030
DECIMAL:
0.XX .030
0.XXX .005

FILE NAME MP17710

XXX

NEXT ASSEMBLY

SCALE	DRAWN	MOHAWK RESOURCES LTD.	
1=1	dak		
CHECKED	APPROVED	TITLE COUNTING MECHANISM ASSEMBLY	
DATE 2/00	WEIGHT LB.	FROM	DRAWING NUMBER MP17710

REV.	DESCRIPTION	DATE	BY	APP'D.
△				

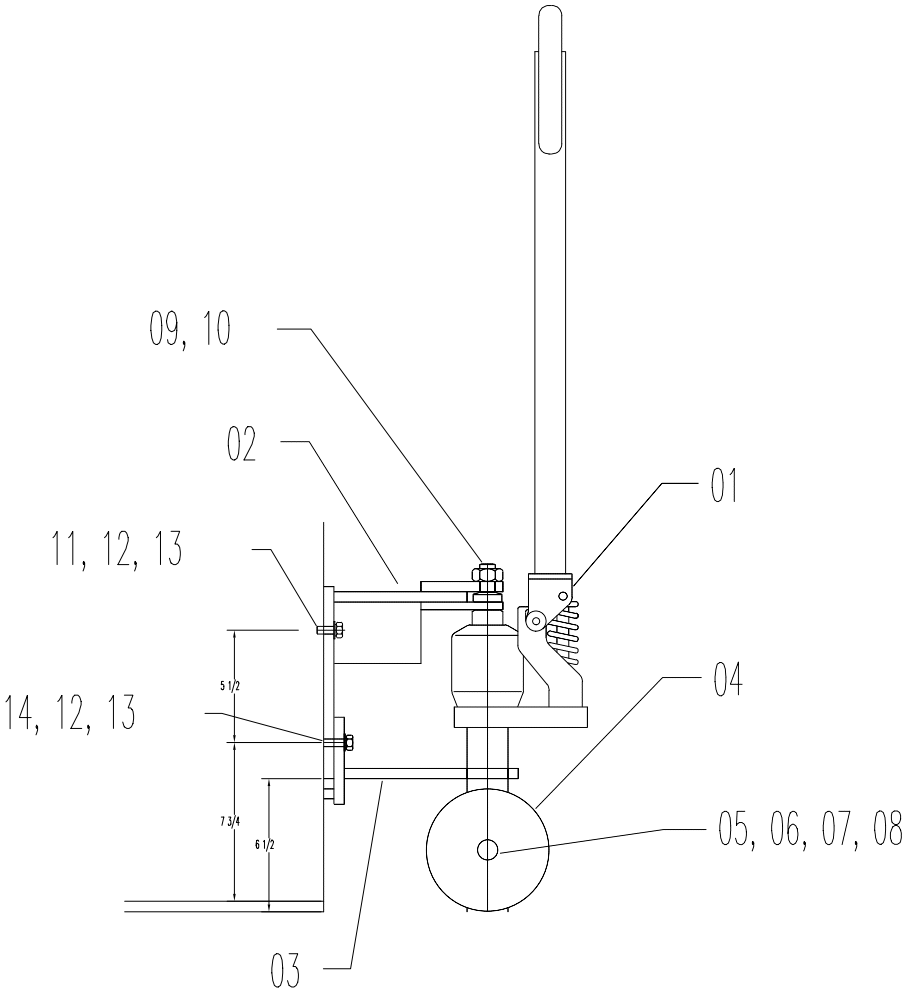

ITEM	QTY.	PART NO.	DESCRIPTION	MATERIAL	
01	1	MSC050	PALLET JACK MECHANISM		P
02	1	MP17511	THIRD WHEEL BRACKET		B
03	1	MP17512	BOTTOM BRACKET		A
04	2	MSC040	WHEEL 6X1-1/2		P
05	1	MP17516	SHAFT		A
06	2	HW050	WASHER 1/2		P
07	2	HB050,250	HEX BOLT 1/2NC X 2 1/2 GR5		P
08	2	HLW050	LOCK WASHER 1/2		P
09	1	HS075,200	SET SCREW 3/4" NC 2" LG		P
10	1	HN075	HEX NUT 3/4 NC		P
11	2	HB0375,100	BOLT 3/8NC 1" LG GRADE 5		P
12	4	HW0375	WASHER 3/8		P
13	4	HLW0375	LOCK WASHER 3/8		P
14	2	HB0375,150	BOLT 3/8NC 1-1/2'LG GRADE 5		P

C -SIZE

NOTICE OF CONFIDENTIAL INFORMATION

INFORMATION CONTAINED HEREIN IS CONFIDENTIAL AND PROPERTY OF MOHAWK RESOURCES LTD., WHERE DRAWING IS FURNISHED TO OTHERS IT SHALL BE USED SOLELY FOR PURPOSES OF INSPECTION, INSTALLATION, OR MAINTENANCE. THE INFORMATION SHALL NOT BE USED OR DISCLOSED BY THE RECIPIENT FOR ANY OTHER PURPOSES WHATSOEVER.

NOTES:
1. REMOVE ALL SHARP CORNERS & EDGES.
2. UNLESS OTHERWISE SPECIFIED, SURFACE FINISH TO BE 125 RMS.
3. WELDING MEDIUM SHALL CONFORM TO AWS SPECIFICATIONS TO E-70XX ELECTRODES OR E-7011 CODE 5.3 FLUX CORE WIRE ONLY.

TOLERANCES:
ANGULAR 1 °
FRACTIONAL .030
DECIMAL:
0.XX .030
0.XXX .005

FILE NAME MP17510

MP17XXX

NEXT ASSEMBLY

SCALE	DRAWN	MOHAWK RESOURCES LTD.	
1/4=1	R.V.		
CHECKED	APPROVED	TITLE HYD. THIRD WHEEL ASSY	
DATE 2/00	WEIGHT LB.	FROM N/A	DRAWING NUMBER MP17510

REV.	DESCRIPTION	DATE	BY	APP'D.
△				

MOBILE HOIST PANDENT CONNECTION LAYOUT

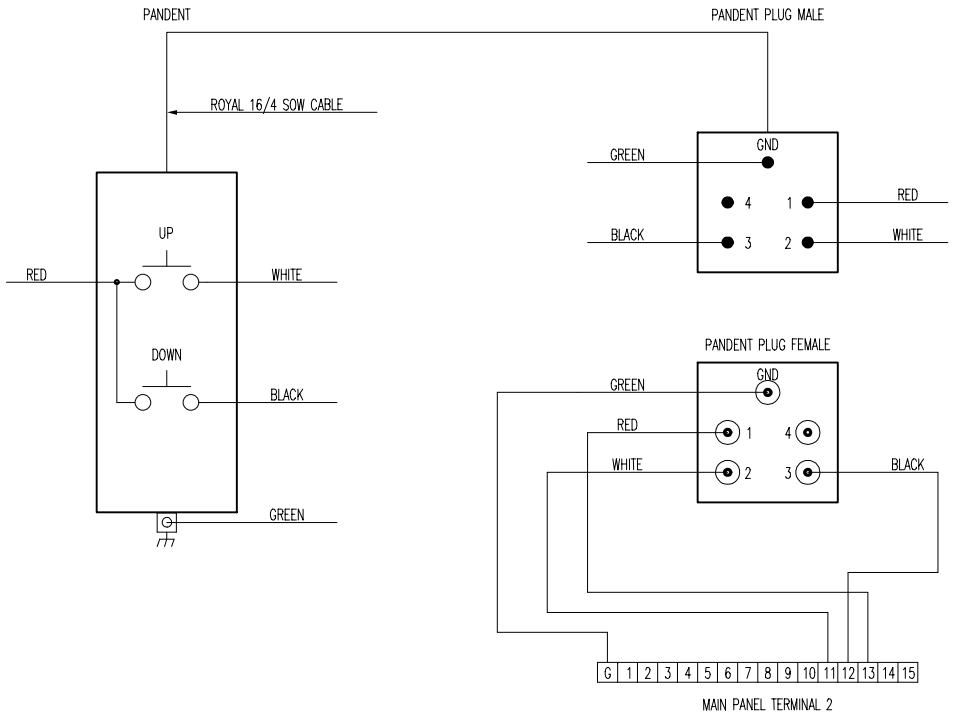

QTY	DESCRIPTION	CATALOG NUMBER	
1	PANDENT	TELEMECANIQUE	XAC-A201
1	PLUG MALE	WEIDMULLER	41100400
1	PLUG FEMALE	WEIDMULLER	41200400
1	HOOD	WEIDMULLER	41300301
1	S.MOUNT	WEIDMULLER	41500300
30'	CABLE	ROYAL	16/4 SOW

CONSULTANTS:

M.V.A. ELECTRIC LTD.
1110 HERITAGE RD. UNIT 5
BURLINGTON, ONTARIO
(905) 331-0567

OLD DWG: E-214

C -SIZE

NOTICE OF CONFIDENTIAL INFORMATION

INFORMATION CONTAINED HEREIN IS CONFIDENTIAL AND PROPERTY OF MOHAWK RESOURCES LTD.. WHERE DRAWING IS FURNISHED TO OTHERS IT SHALL BE USED SOLELY FOR PURPOSES OF INSPECTION, INSTALLATION, OR MAINTENANCE. THE INFORMATION SHALL NOT BE USED OR DISCLOSED BY THE RECIPIENT FOR ANY OTHER PURPOSES WHATSOEVER.

NOTES:
1. REMOVE ALL SHARP CORNERS & EDGES.
2. UNLESS OTHERWISE SPECIFIED, SURFACE FINISH TO BE 125 RMS.
3. WELDING MEDIUM SHALL CONFORM TO AWS SPECIFICATIONS TO E-70XX ELECTRODES OR E-70T1 CODE 5.3 FLUX CORE WIRE ONLY.

TOLERANCES:
ANGULAR ± 1 °
FRACTIONAL ± .030
DECIMAL:
0.XX ± .030
0.XXX ± .005

FILE NAME: MP17-PEND

MP17XXX

NEXT ASSEMBLY

SCALE	DRAWN	MOHAWK RESOURCES LTD.	
1=1	R.V.		
CHECKED	APPROVED	TITLE: PENDENT CONTROL WIRING	
DATE: 2/00	WEIGHT: LB.	FROM: N/A	DRAWING NUMBER: MP17-PEND

REV.	DESCRIPTION	DATE	BY	APP'D.
△				

MOBILE HOIST CONNECTION DIAGRAM FOR 230 VOLT 3 PHASE CONFIGURATION

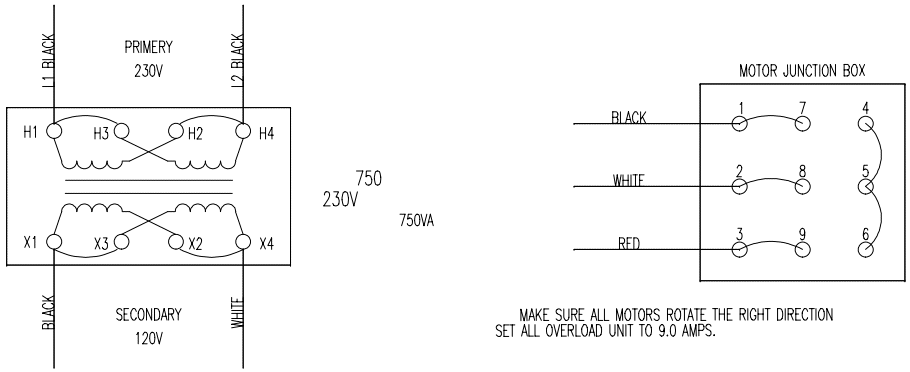

MAKE SURE ALL MOTORS ROTATE THE RIGHT DIRECTION
SET ALL OVERLOAD UNIT TO 9.0 AMPS.

MOBILE HOIST CONNECTION DIAGRAM FOR 460 VOLT 3 PHASE CONFIGURATION

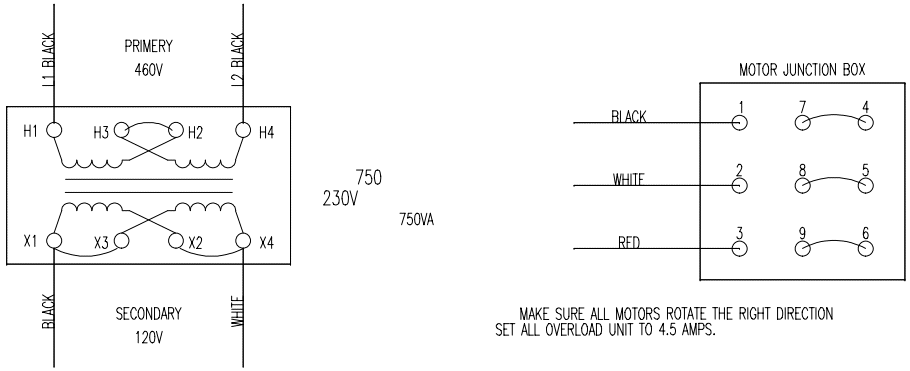

MAKE SURE ALL MOTORS ROTATE THE RIGHT DIRECTION
SET ALL OVERLOAD UNIT TO 4.5 AMPS.

CONSULTANTS:

M.V.A. ELECTRIC LTD.
1110 HERITAGE RD. UNIT 5
BURLINGTON, ONTARIO
(905) 331-0567

OLD DWG: E-004

C -SIZE

NOTICE OF CONFIDENTIAL INFORMATION

INFORMATION CONTAINED HEREIN IS CONFIDENTIAL AND PROPERTY OF MOHAWK RESOURCES LTD., WHERE DRAWING IS FURNISHED TO OTHERS IT SHALL BE USED SOLELY FOR PURPOSES OF INSPECTION, INSTALLATION, OR MAINTENANCE. THE INFORMATION SHALL NOT BE USED OR DISCLOSED BY THE RECIPIENT FOR ANY OTHER PURPOSES WHATSOEVER.

NOTES:
1. REMOVE ALL SHARP CORNERS & EDGES.
2. UNLESS OTHERWISE SPECIFIED, SURFACE FINISH TO BE 125 RMS.
3. WELDING MEDIUM SHALL CONFORM TO AWS SPECIFICATIONS TO E-70XX ELECTRODES OR E-70T1 CODE 5.3 FLUX CORE WIRE ONLY.

TOLERANCES:
ANGULAR 1 °
FRACTIONAL .030
DECIMAL:
0.XX .030
0.XXX .005

FILE NAME MP17-CONV

X

NEXT ASSEMBLY

SCALE	DRAWN	MOHAWK RESOURCES LTD.	
NONE	dak		
CHECKED	APPROVED	TITLE MOBIL HOIST 460/230 V CONV.	
DATE 2/00	WEIGHT LB.	FROM	DRAWING NUMBER MP17-CONV △

MAXIMUM FLOOR SLOPE:

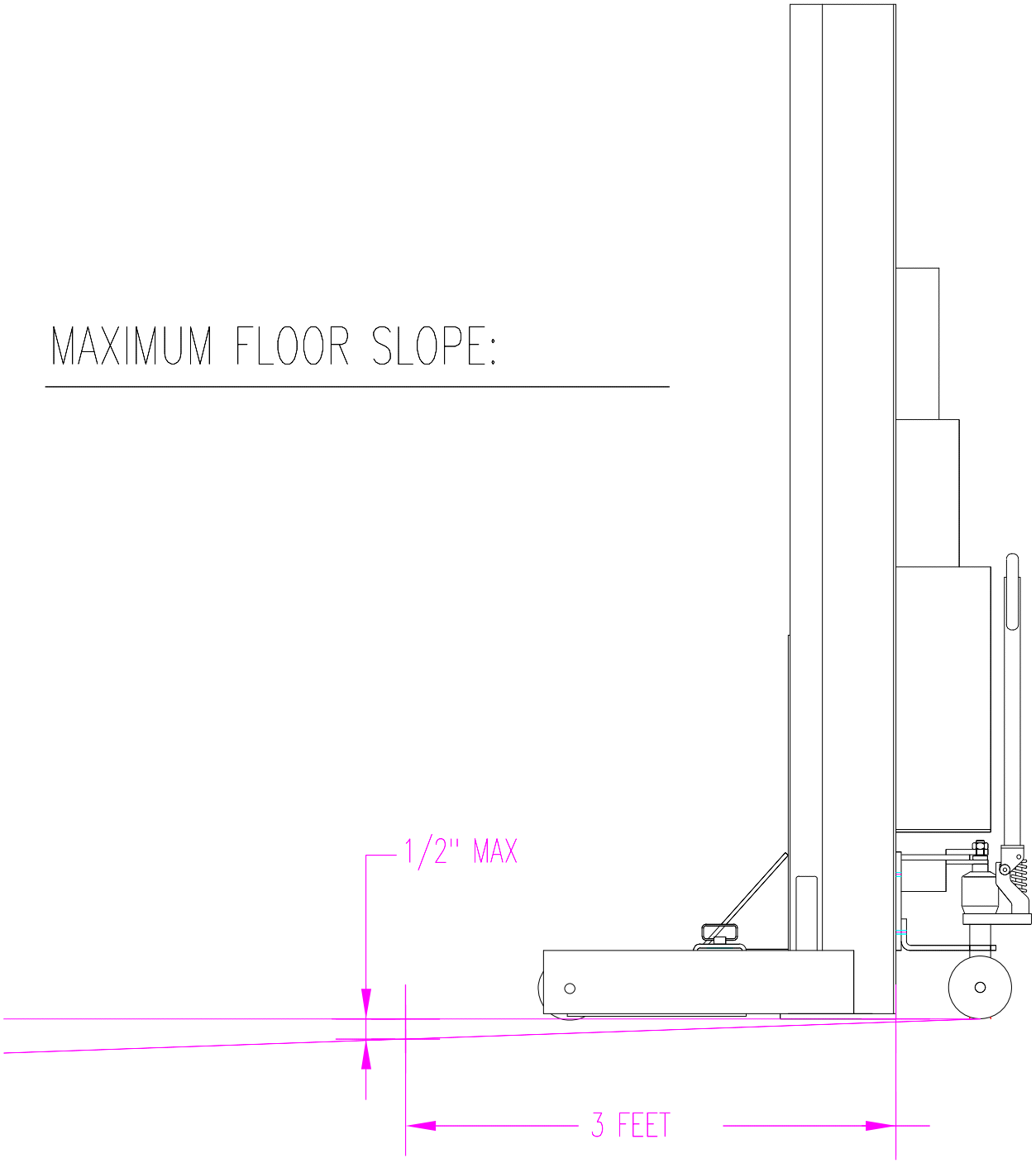

MAX SAFE SLOPE OF WORKING FLOOR
FOR MOBILE LIFT IS 1/2" OVER 3 FEET.

⚠ WARNING

Clear area if vehicle is in danger of falling.

©

⚠ WARNING

Remain clear of lift when raising or lowering vehicle.

©

⚠ WARNING

Locate lift on firm, level surface, preferably concrete.

©

⚠ WARNING

Be sure intended lifts are moving together evenly.

©

⚠ WARNING

All lifting forks must properly engage vehicle tires or supports.

©

⚠ WARNING

Do not drive over or pinch electrical cables.

©

⚠ WARNING

Keep feet clear of lift while lowering.

©

The messages and pictographs shown are generic in nature and are meant to generally represent hazards common to all automotive lifts regardless of specific style.

Funding for the development and validation of these labels was provided by the Automotive Lift Institute, PO Box 33116 Indialantic, FL 32903.

They are protected by copyright. Set of labels may be obtained from ALI or its member companies.

© 1992 by ALI, Inc. ALI/WL400w

CAUTION
Lift to be used by trained operator only.
CAUTION
Authorized personnel only in lift area.
CAUTION
When moving lift, be careful to avoid tipping.
CAUTION
Check for overhead obstructions before raising vehicle.
The messages and pictographs shown are generic in nature and are meant to generally represent hazards common to all automotive lifts regardless of specific style.
Funding for the development and validation of these labels was provided by the Automotive Lift Institute, PO Box 33116 Indialantic, FL 32903.
They are protected by copyright. Set of labels may be obtained from ALI or its member companies.
© 1992 by ALI, Inc.
ALI/WL400c

SAFETY INSTRUCTIONS
Read operating and safety manuals before using lift.
SAFETY INSTRUCTIONS
Proper maintenance and inspection is necessary for safe operation.
SAFETY INSTRUCTIONS
Do not operate a damaged lift.
The messages and pictographs shown are generic in nature and are meant to generally represent hazards common to all automotive lifts regardless of specific style.
Funding for the development and validation of these labels was provided by the Automotive Lift Institute, PO Box 33116 Indialantic, FL 32903.
They are protected by copyright. Set of labels may be obtained from ALI or its member companies.
© 1992 by ALI, Inc.
ALI/WL400e

MOHAWK

ELECTRICAL SCHEMATICS, 3 PHASE

MP-18-AF-SERIES

ELECTRIC/HYDRAULIC PORTABLE LIFT

4 POST ARRANGEMENT

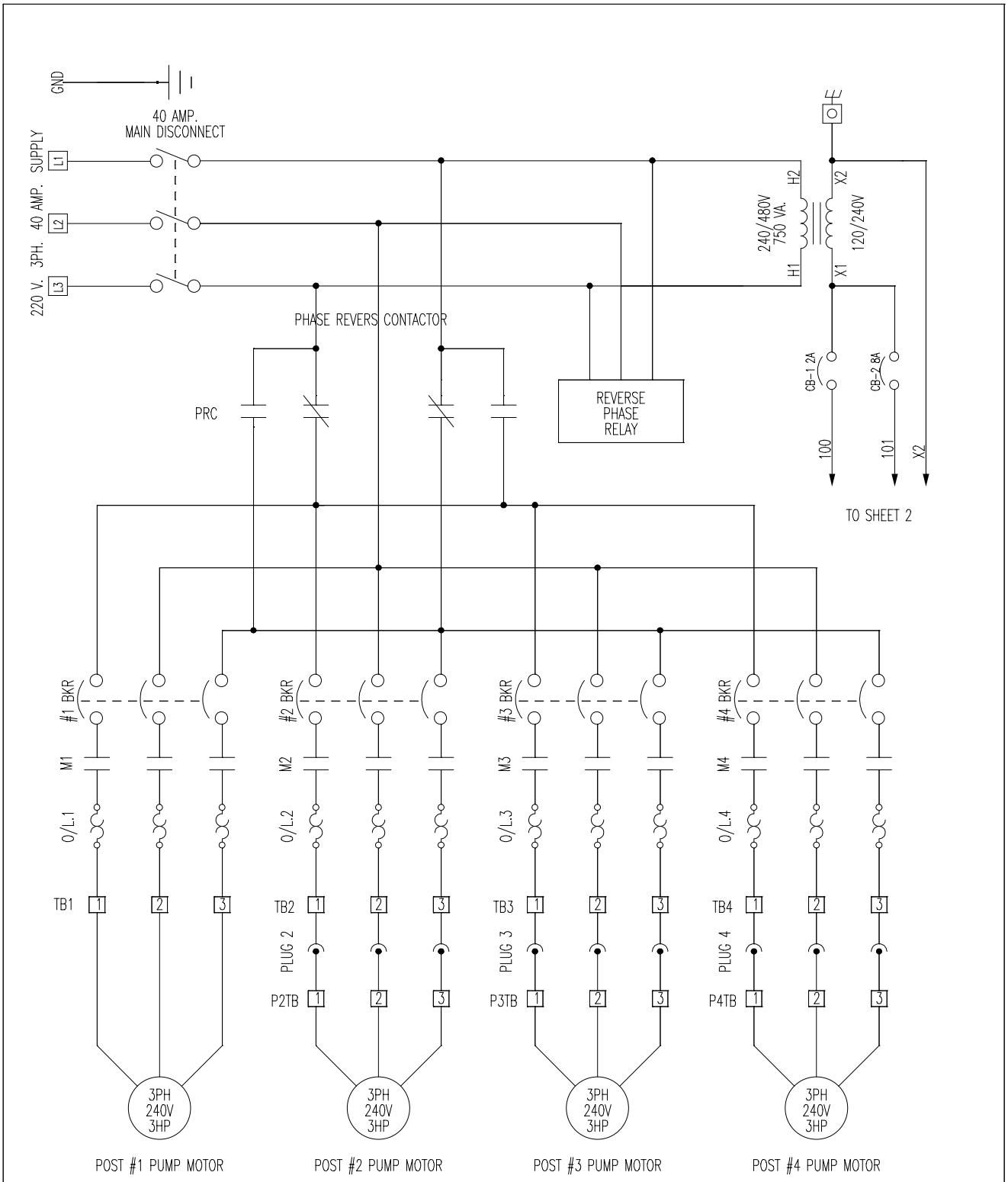

REV. #1	DRAWN BY M.VIG	CHECKED	MOHAWK RESOURCES	TITLE 4 POST MOBILE LIFT	
TYPE 240/40/4P	DATE 06/16/00		65 VROOMAN AVE AMSTERDAM, NY	DWG.NO. E – 208	SHT.NO. 1
PHONE (905) 331-0567					

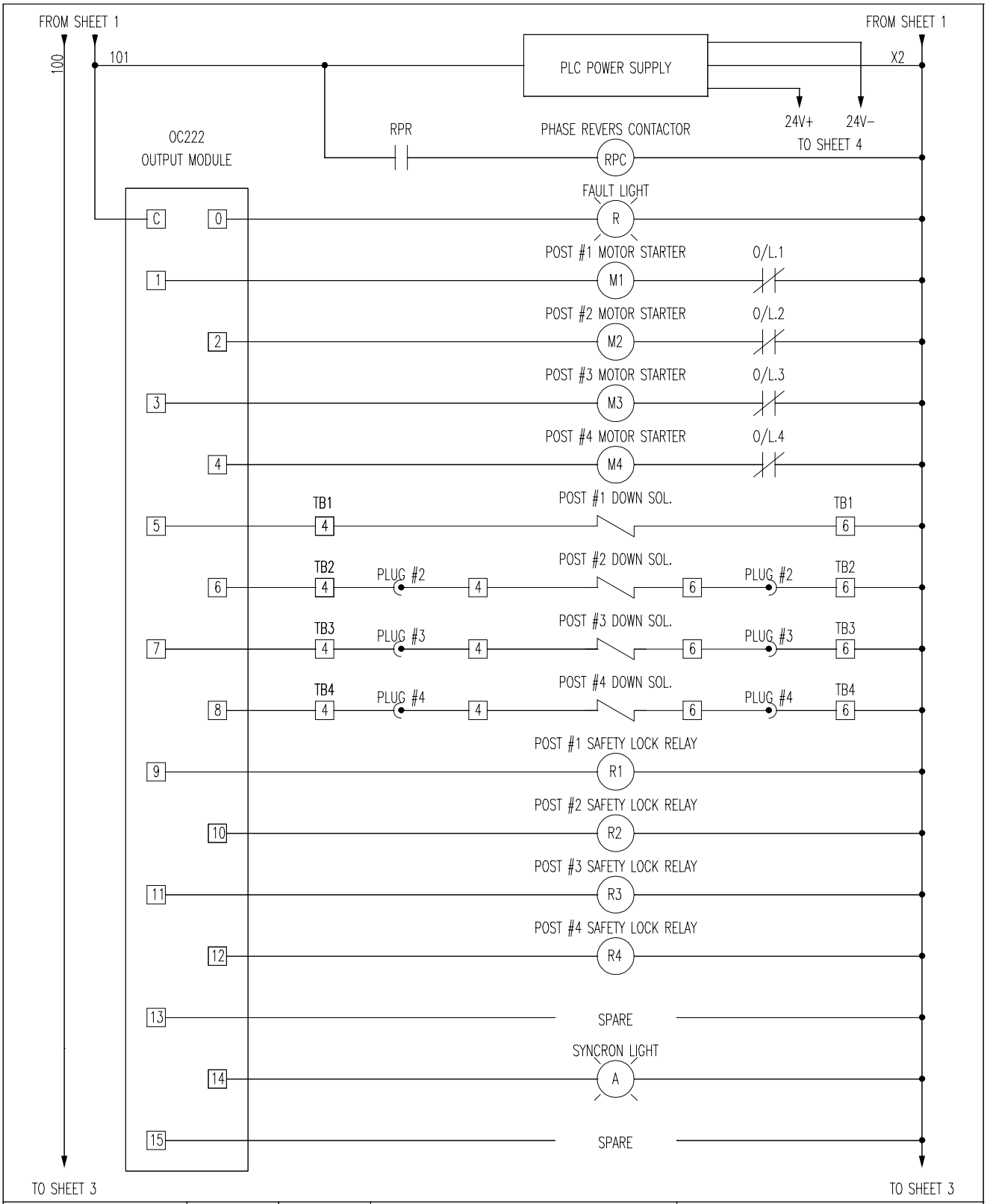

REV. #1	DRAWN BY M.VIG	CHECKED	MOHAWK RESOURCES	TITLE 4 POST MOBILE LIFT	
TYPE 240/40/4P	DATE 06/16/00		65 VROOMAN AVE AMSTERDAM, NY	DWG.NO. E - 208	SHT.NO. 2
PHONE (905) 331-0567					

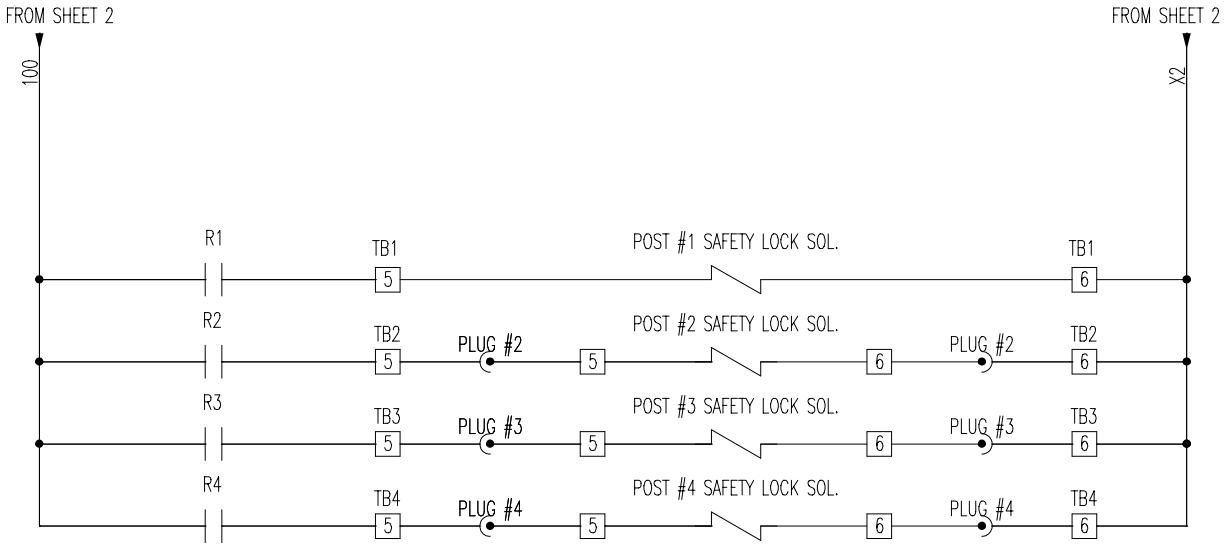

CONSULTS:

M.V.A. ELECTRIC LTD.
1110 HERITAGE RD.
BURLINGTON, ONTARIO

REV. #1	DRAWN BY M.VIG	CHECKED	**MOHAWK RESOURCES**	TITLE 4 POST MOBILE LIFT	
TYPE 240/40/4P	DATE 06/16/00		65 VROOMAN AVE	DWG.NO. E – 208	SHT.NO. 3
PHONE (905) 331-0567			AMSTERDAM, NY		

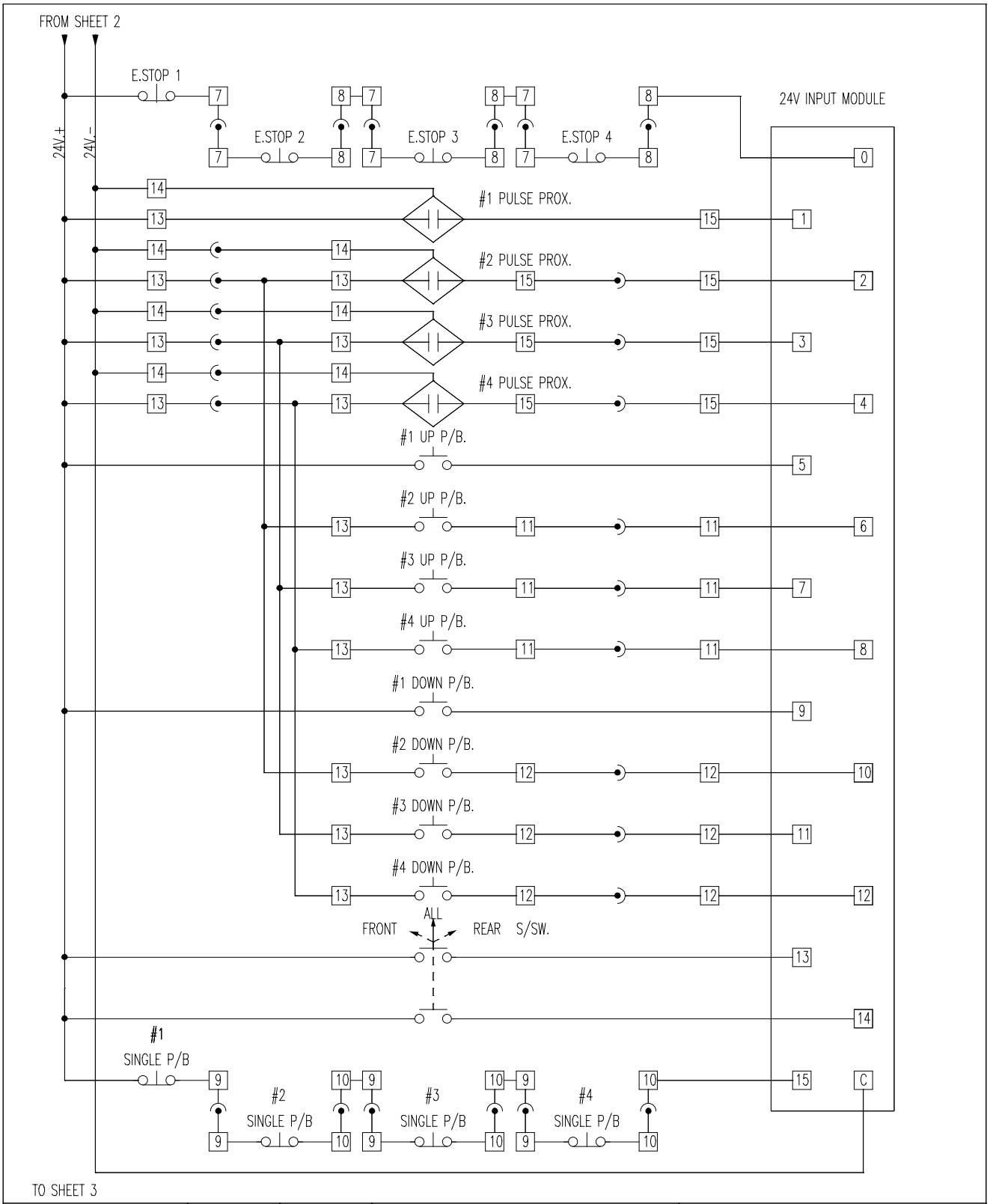

REV. #1	DRAWN BY M.VIG	CHECKED	MOHAWK RESOURCES	TITLE 4 POST MOBILE LIFT	
TYPE 240/40/4P	DATE 06/16/00		65 VROOMAN AVE	DWG.NO. E - 208	SHT.NO. 4
PHONE (905) 331-0567			AMSTERDAM, NY		

TERMINALS, PLUGS, CABLE COLOR CONFIGURATION

NOTE: MAIN PANEL TERMINAL GRUB 2-3-4 WIRED TO FEMALE PLUG 2-3-4, TERMINAL NUMBERS CORRESPOND PLUG PIN NUMBERS.

NOTE: POST 2-3-4 WIRED IDENTICAL. POSTS ARE INTERCHANGEABLE.

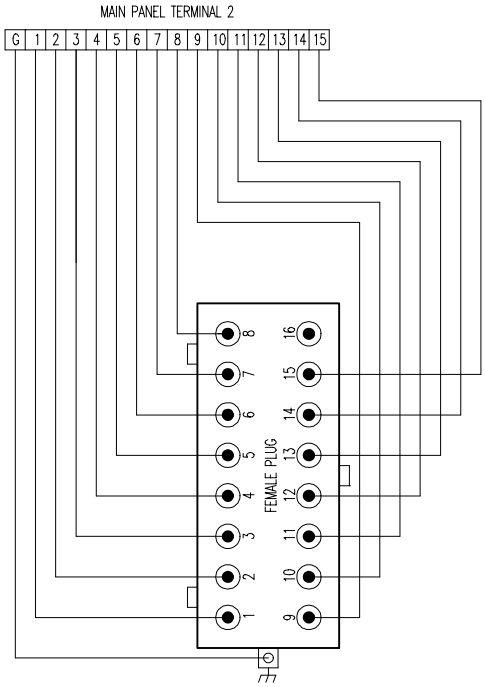

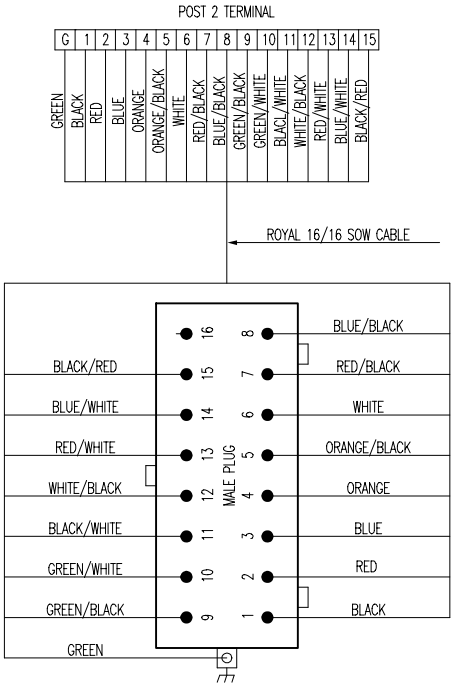

DUMMY PLUG JUMPER CONFIGURATION

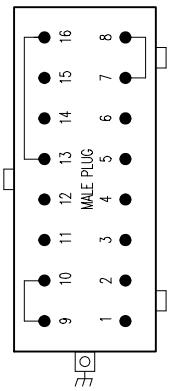

REV. #1	DRAWN BY M.VIG	CHECKED	MOHAWK RESOURCES	TITLE 4 POST MOBILE LIFT	
TYPE 240/40/4P	DATE 06/16/00		65 VROOMAN AVE	DWG.NO. E - 208	SHT.NO. 5
PHONE (905) 331-0567			AMSTERDAM, NY		

MOHAWK

ELECTRICAL SCHEMATICS, 1 PHASE

MP-18-AF-SERIES

ELECTRIC/HYDRAULIC PORTABLE LIFT

4 POST ARRANGEMENT

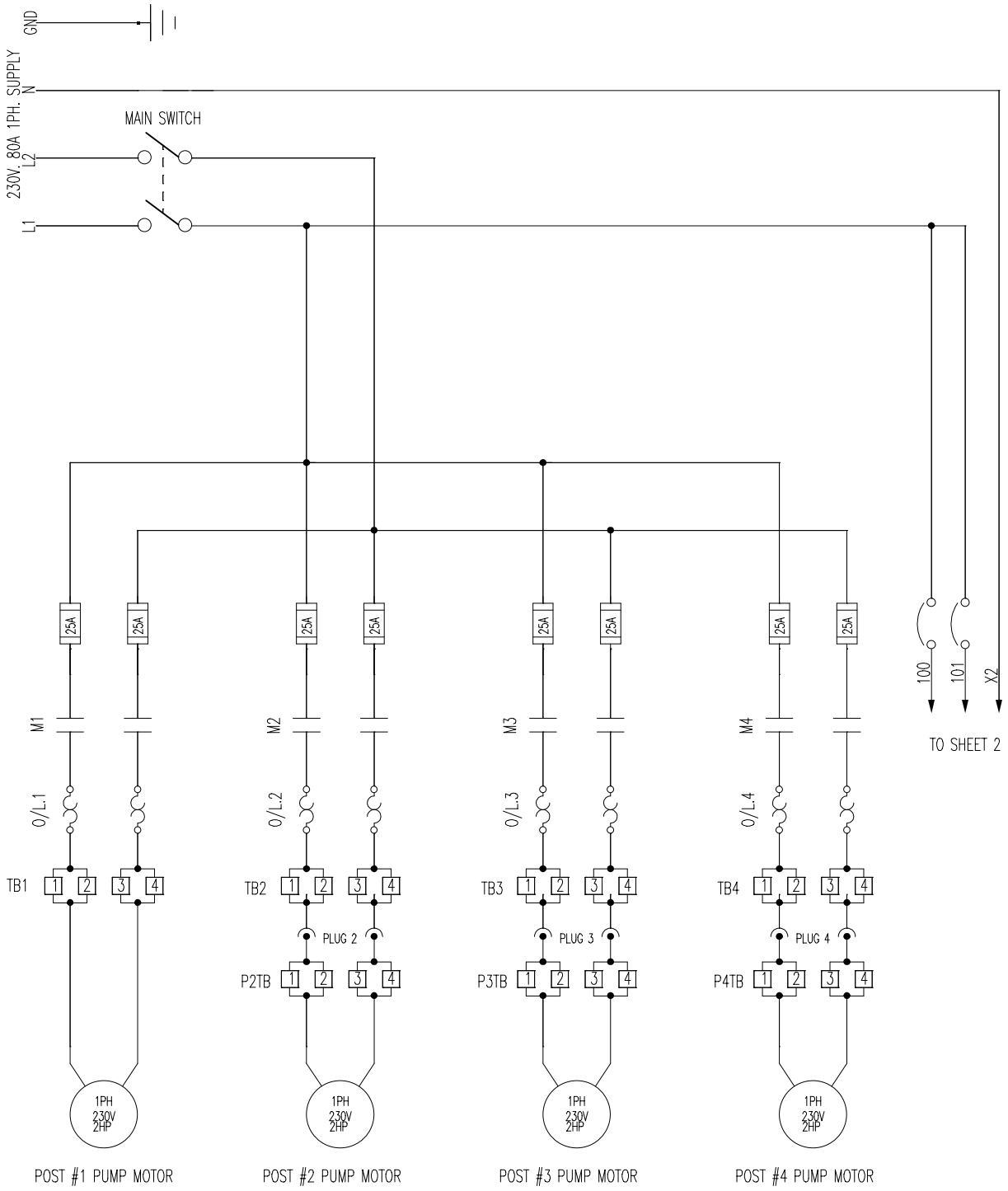

REV.		DRAWN BY M.VIG	CHECKED	MOHAWK RESOURCES 65 VROOMAN AVE AMSTERDAM, NY	TITLE SINGLE PHASE 4 POST MOBILE LIFT
TYPE	230V80A4PSFH	DATE 08/30/00	DATE		DWG.NO. E - 213 / SHT.NO. 1
PHONE	(905) 331-0567				

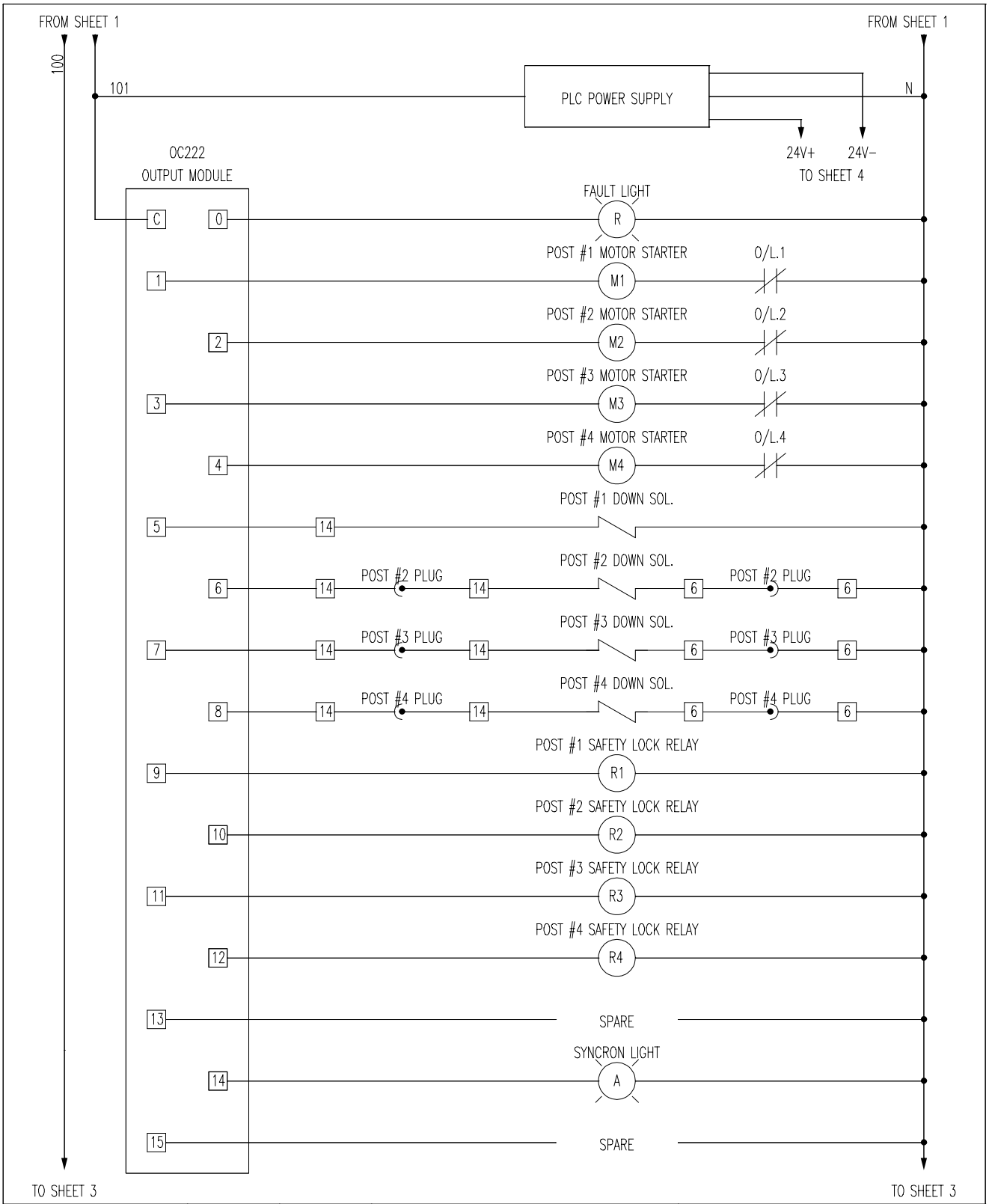

REV.	DRAWN BY	CHECKED	MOHAWK RESOURCES	TITLE	SINGLE PHASE 4 POST MOBILE LIFT
TYPE 230V80A4PSFH	M.VIG		65 VROOMAN AVE	DWG.NO.	SHT.NO.
PHONE (905) 331-0567	DATE 08/30/00	DATE	AMSTERDAM, NY	E - 213	2

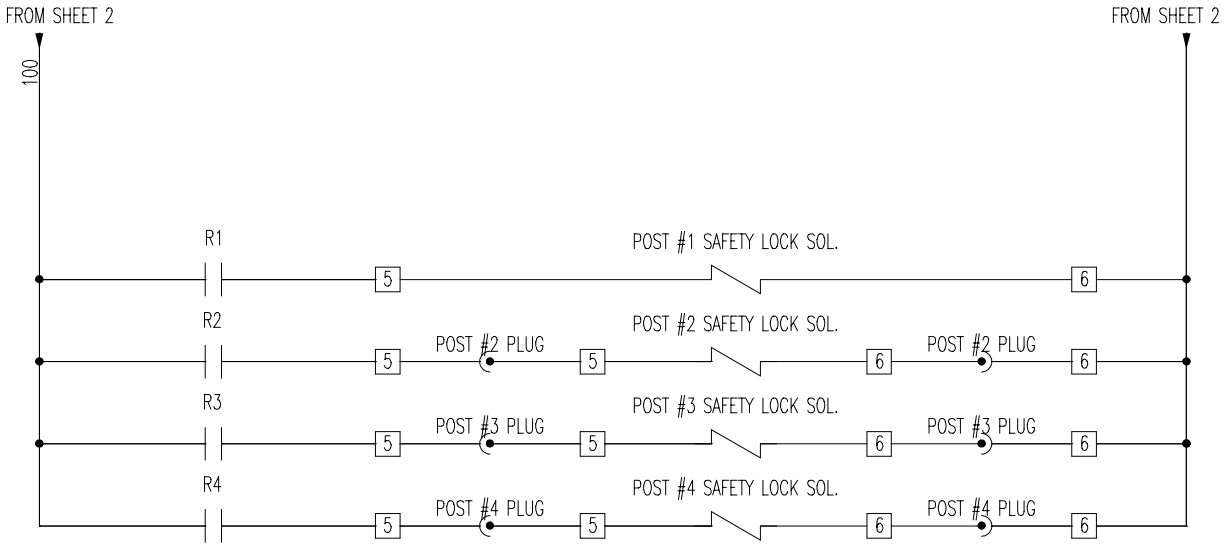

CONSULTS:

M.V.A. ELECTRIC LTD.
1110 HERITAGE RD.
BURLINGTON, ONTARIO

REV.		DRAWN BY M.VIG	CHECKED	**MOHAWK RESOURCES** 65 VROOMAN AVE AMSTERDAM, NY	TITLE SINGLE PHASE 4 POST MOBILE LIFT
TYPE	230V80A4PSFH	DATE 08/30/00	DATE		DWG.NO. E - 213 / SHT.NO. 3
PHONE	(905) 331-0567				

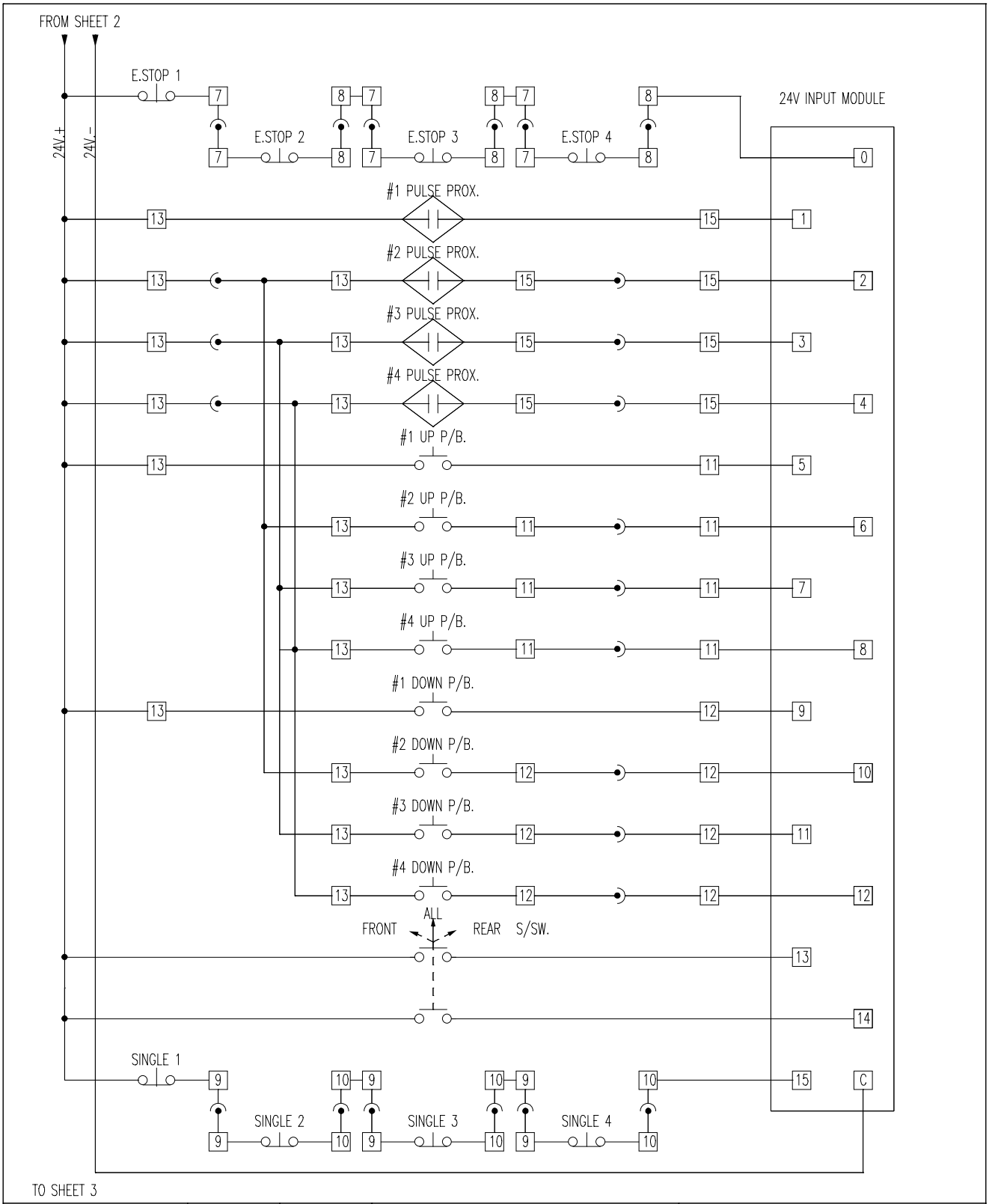

REV.	DRAWN BY	CHECKED	MOHAWK RESOURCES	TITLE	SINGLE PHASE 4 POST MOBILE LIFT
TYPE 230V80A4PSFH	M.VIG		65 VROOMAN AVE		
PHONE (905) 331-0567	DATE 08/30/00	DATE	AMSTERDAM, NY	DWG.NO. E - 213	SHT.NO. 4

TERMINALS, PLUGS, CABLE COLOR CONFIGURATION

NOTE: MAIN PANEL TERMINAL GROUP 2-3-4 WIRED TO FEMALE PLUG 2-3-4, TERMINAL NUMBERS CORRESPOND PLUG PIN NUMBERS.

NOTE: POST 2-3-4 WIRED IDENTICAL. POSTS ARE INTERCHANGEABLE.

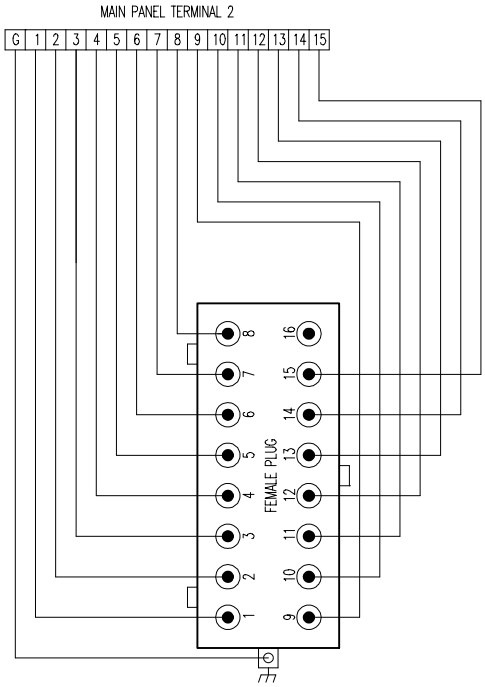

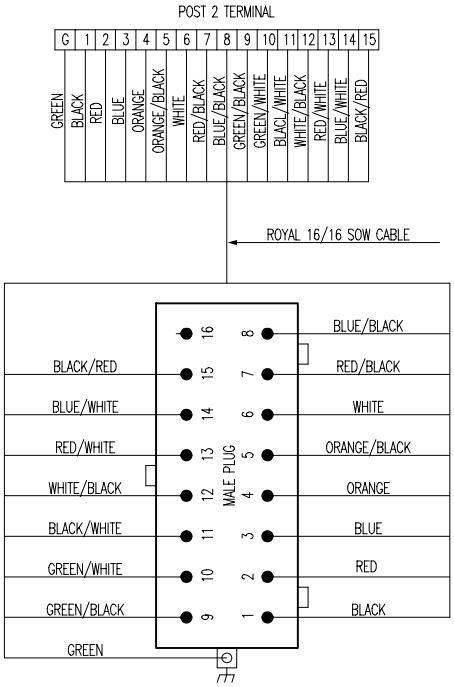

DUMMY PLUG JUMPER CONFIGURATION

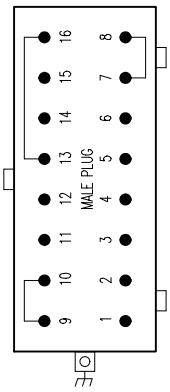

REV.		DRAWN BY M.VIG	CHECKED	MOHAWK RESOURCES 65 VROOMAN AVE AMSTERDAM, NY	TITLE SINGLE PHASE 4 POST MOBILE LIFT
TYPE	230V80A4PSFH	DATE 08/30/00	DATE		DWG.NO. E - 213 / SHT.NO. 5
PHONE	(905) 331-0567				

MOHAWK

ELECTRICAL SCHEMATICS, 3 PHASE

MP-18-AF-SERIES

ELECTRIC/HYDRAULIC PORTABLE LIFT

6 POST ARRANGEMENT

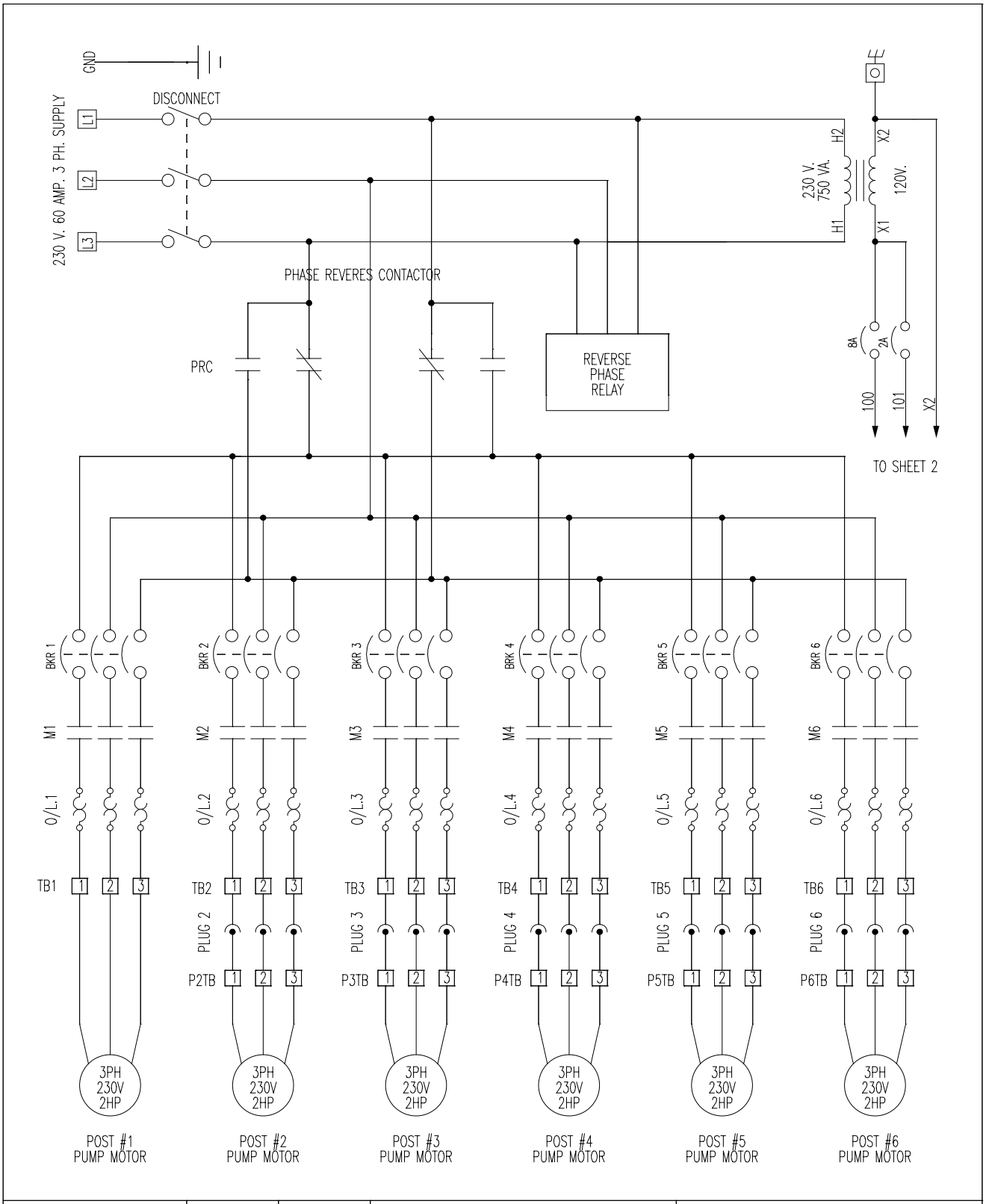

REV.	DRAWN BY	CHECKED	MOHAWK RESOURCES	TITLE	
TYPE 230/60/6P	S.COLLIN			6 POST MOBILE LIFT	
PHONE (905) 331-0567	DATE 03/26/01	PART #	65 VROOMAN AVE AMSTERDAM, NY	DWG.NO. E - 212	SHT.NO. 1

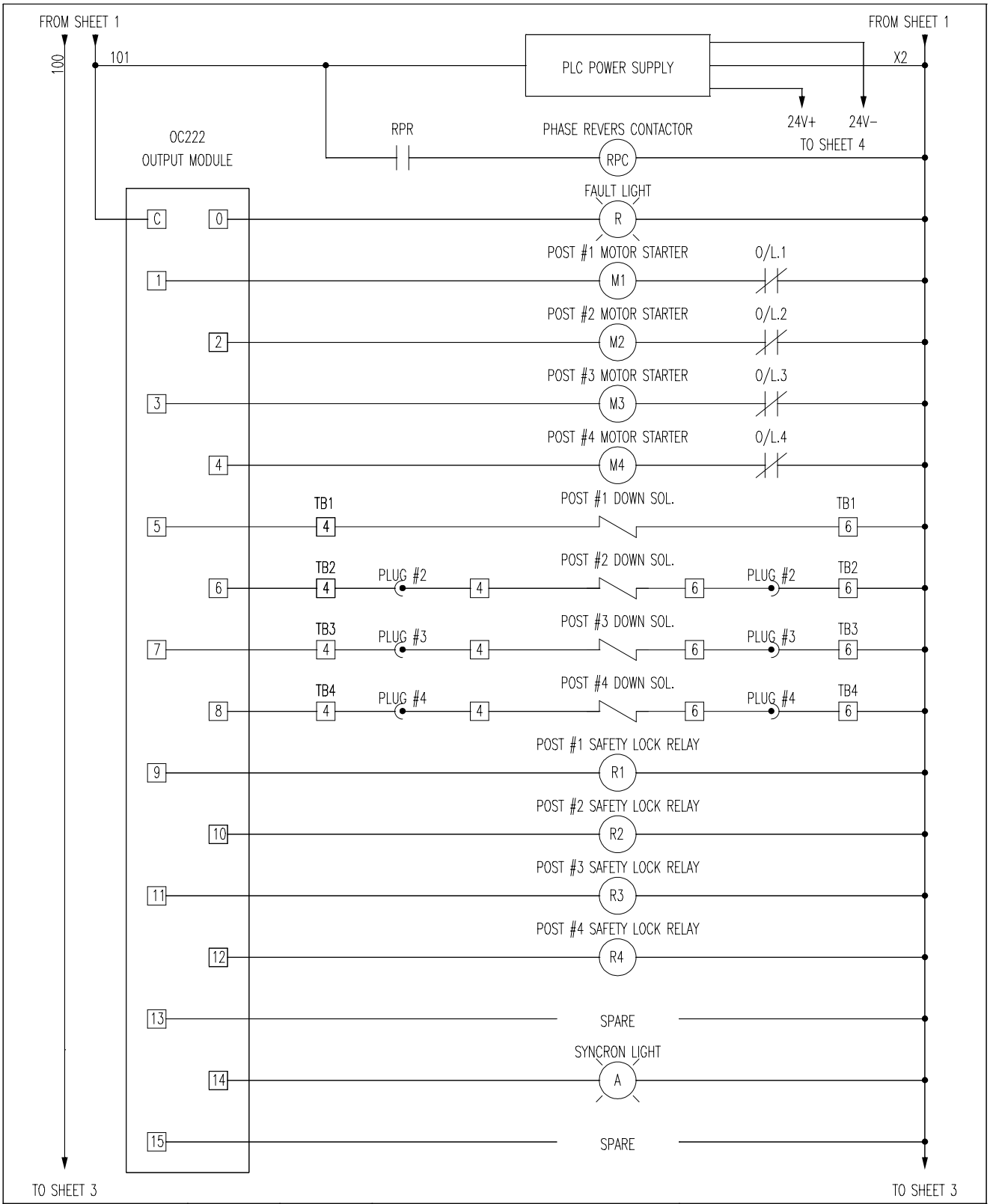

REV.	DRAWN BY	CHECKED	MOHAWK RESOURCES	TITLE
TYPE 230/60/6P	S.COLLIN		65 VROOMAN AVE	6 POST MOBILE LIFT
PHONE (905) 331-0567	DATE 03/26/01	PART #	AMSTERDAM, NY	DWG.NO. E - 212 / SHT.NO. 2

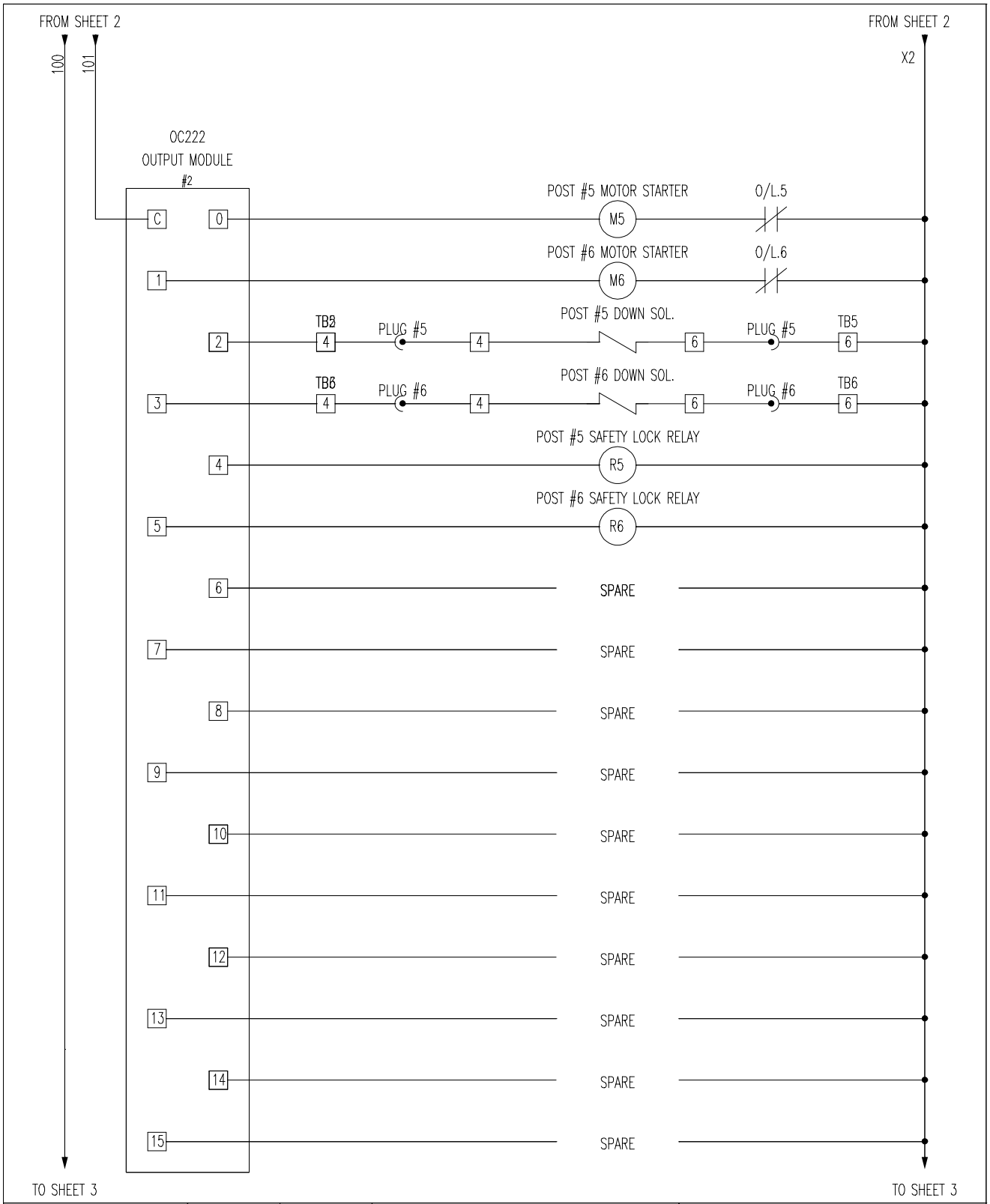

REV.	DRAWN BY	CHECKED	MOHAWK RESOURCES	TITLE	
TYPE 230/60/6P	S.COLLIN			6 POST MOBILE LIFT	
PHONE (905) 331-0567	DATE 03/26/01	PART #	65 VROOMAN AVE AMSTERDAM, NY	DWG.NO. E - 212	SHT.NO. 2-1

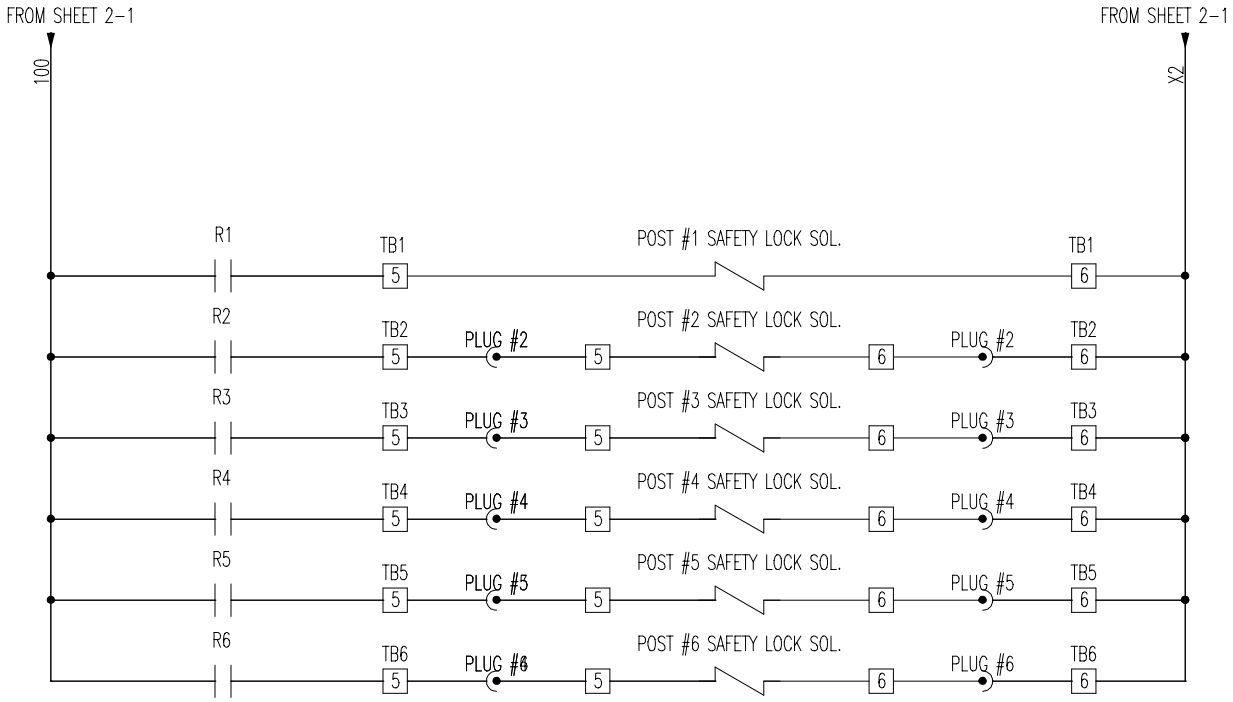

CONSULTS:

M.V.A. ELECTRIC LTD.
1110 HERITAGE RD.
BURLINGTON, ONTARIO

REV.	DRAWN BY	CHECKED		TITLE	
TYPE 230/60/6P	S.COLLIN		**MOHAWK RESOURCES**	6 POST MOBILE LIFT	
PHONE (905) 331-0567	DATE 03/26/01	PART #	65 VROOMAN AVE AMSTERDAM, NY	DWG.NO. E - 212	SHT.NO. 3

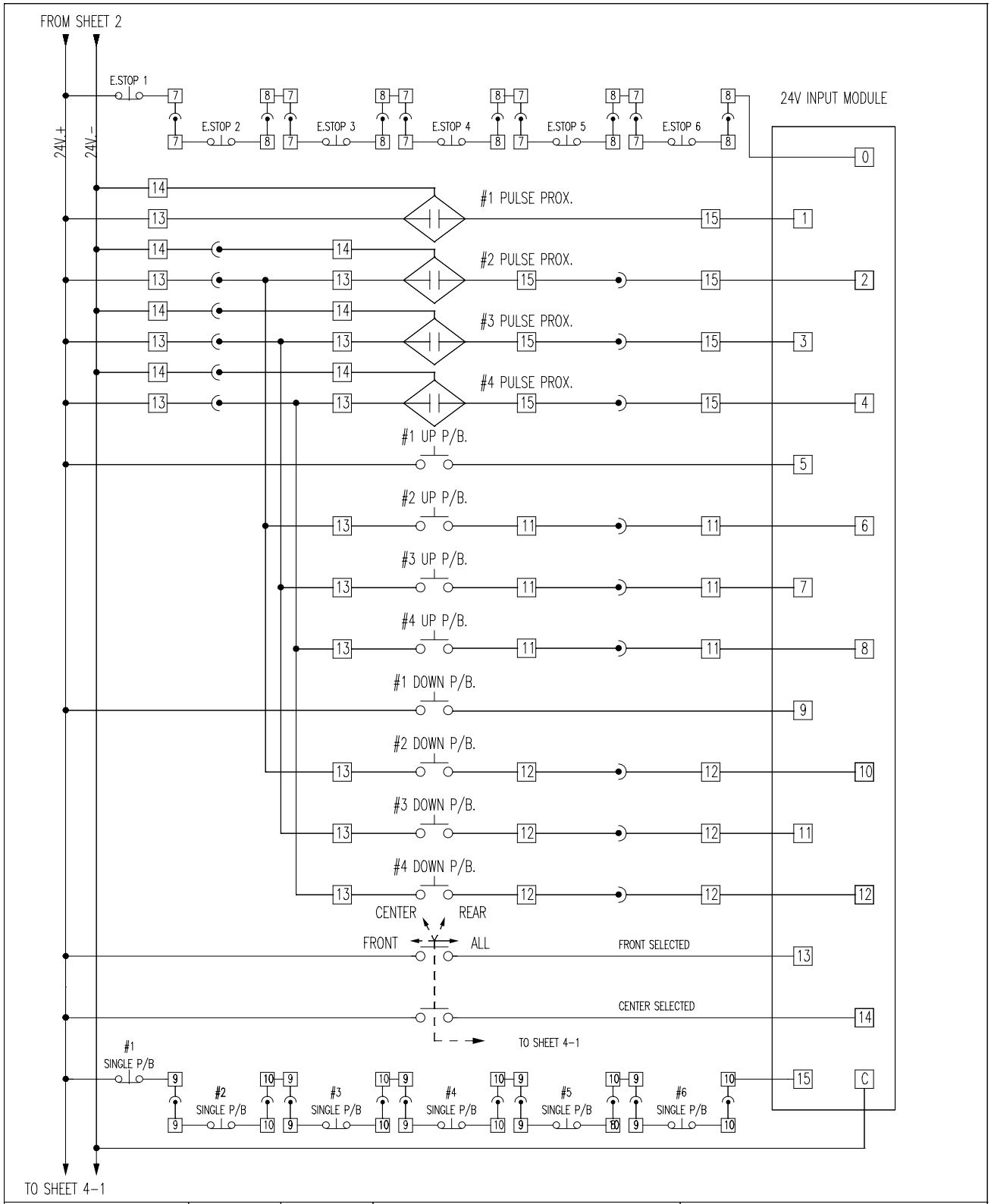

REV.	DRAWN BY	CHECKED	MOHAWK RESOURCES	TITLE	
	S.COLLIN			6 POST MOBILE LIFT	
TYPE 230/60/6P	DATE	PART #	65 VROOMAN AVE	DWG.NO.	SHT.NO.
PHONE (905) 331-0567	03/26/01		AMSTERDAM, NY	E - 212	4

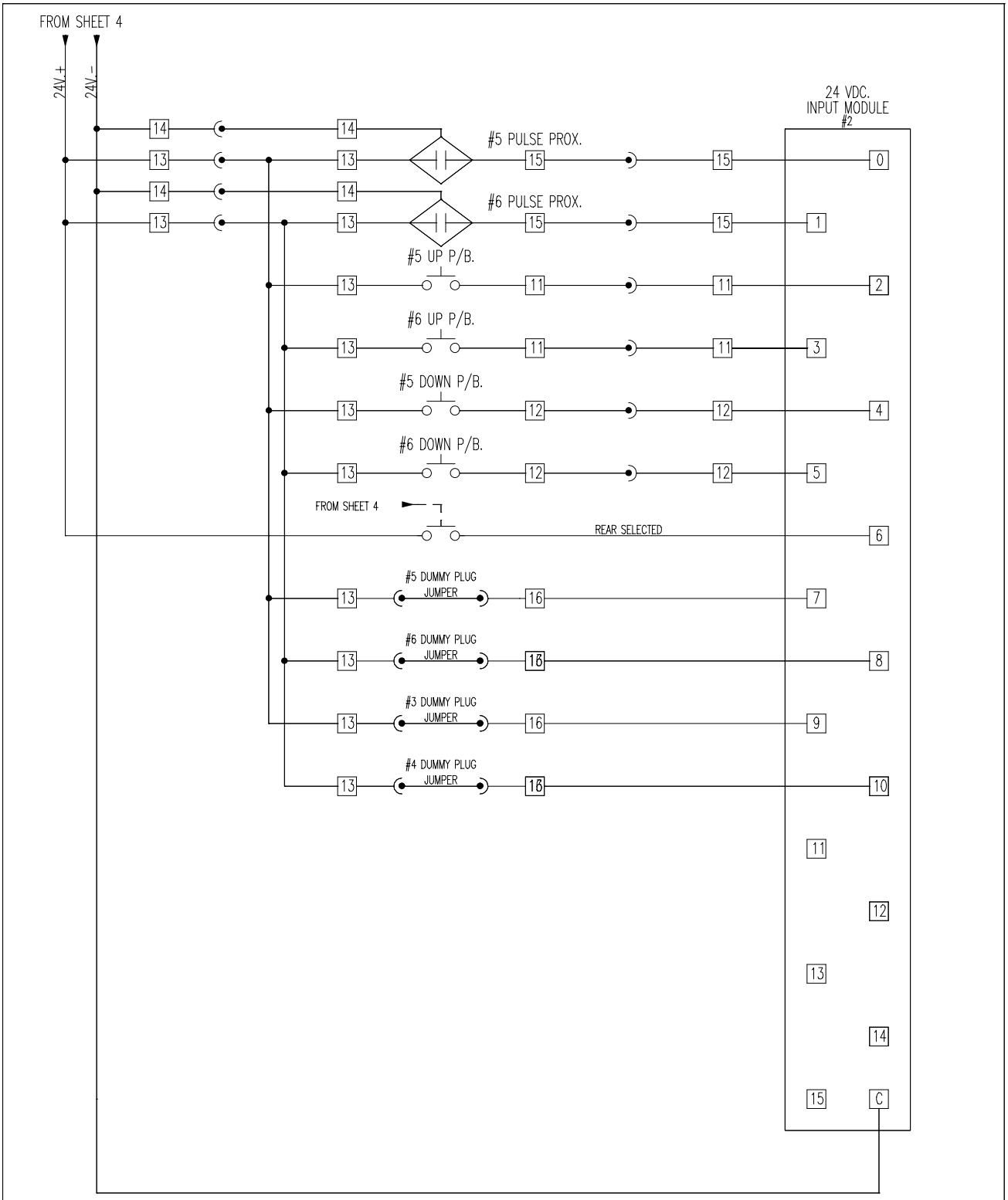

REV.	DRAWN BY	CHECKED	MOHAWK RESOURCES	TITLE	
	S.COLLIN			6 POST MOBILE LIFT	
TYPE 230/60/6P	DATE	PART #	65 VROOMAN AVE	DWG.NO.	SHT.NO.
PHONE (905) 331-0567	03/26/01		AMSTERDAM, NY	E - 212	4-1

TERMINALS, PLUGS, CABLE COLOR CONFIGURATION

NOTE: MAIN PANEL TERMINAL GRUB 2-3-4-5 WIRED TO FEMALE PLUG 2-3-4-5 TERMINAL NUMBERS CORRESPOND PLUG PIN NUMBERS.

NOTE: POST 2-3-4-5 WIRED IDENTICAL. POSTS ARE INTERCHANGEABLE.

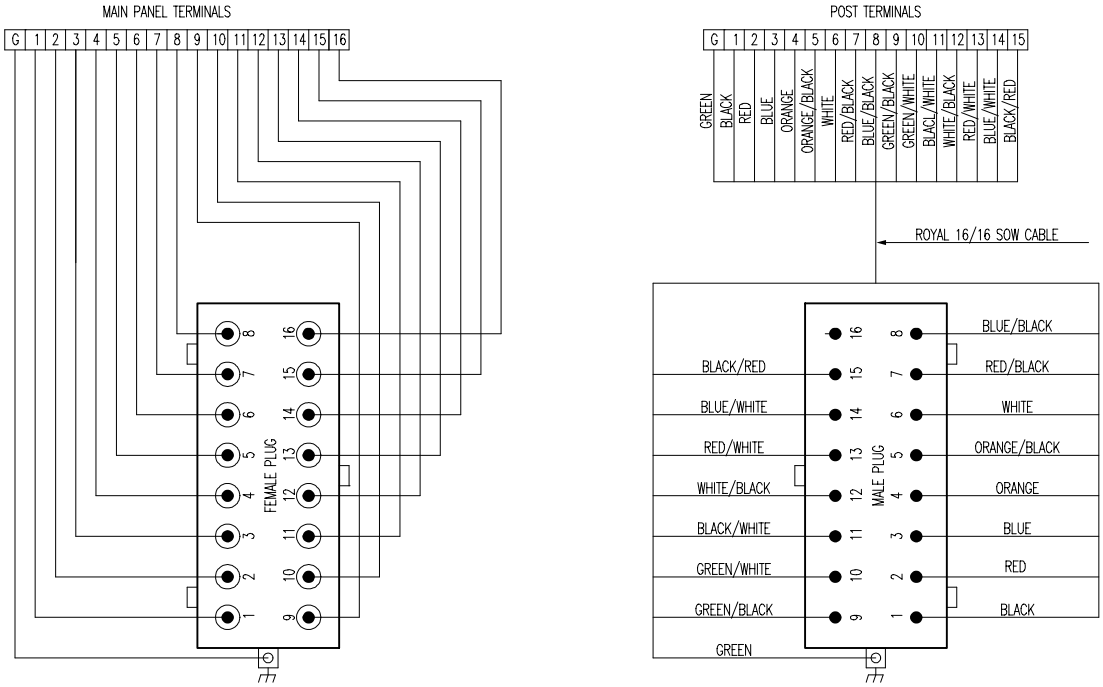

DUMMY PLUG JUMPER CONFIGURATION

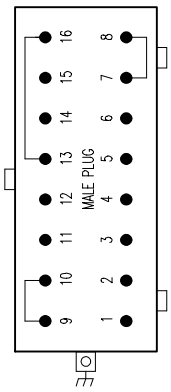

REV.	DRAWN BY	CHECKED		TITLE	
	S.COLLIN		MOHAWK RESOURCES	6 POST MOBILE LIFT	
TYPE 230/60/6P	DATE	PART #	65 VROOMAN AVE	DWG.NO.	SHT.NO.
PHONE (905) 331-0567	03/26/01		AMSTERDAM, NY	E - 212	5

MOHAWK

ELECTRICAL SCHEMATICS, 3 PHASE WITH DUAL SOLENOID DOWN

MP-18-AF-SERIES

ELECTRIC/HYDRAULIC PORTABLE LIFT

4&6 POST ARRANGEMENTS

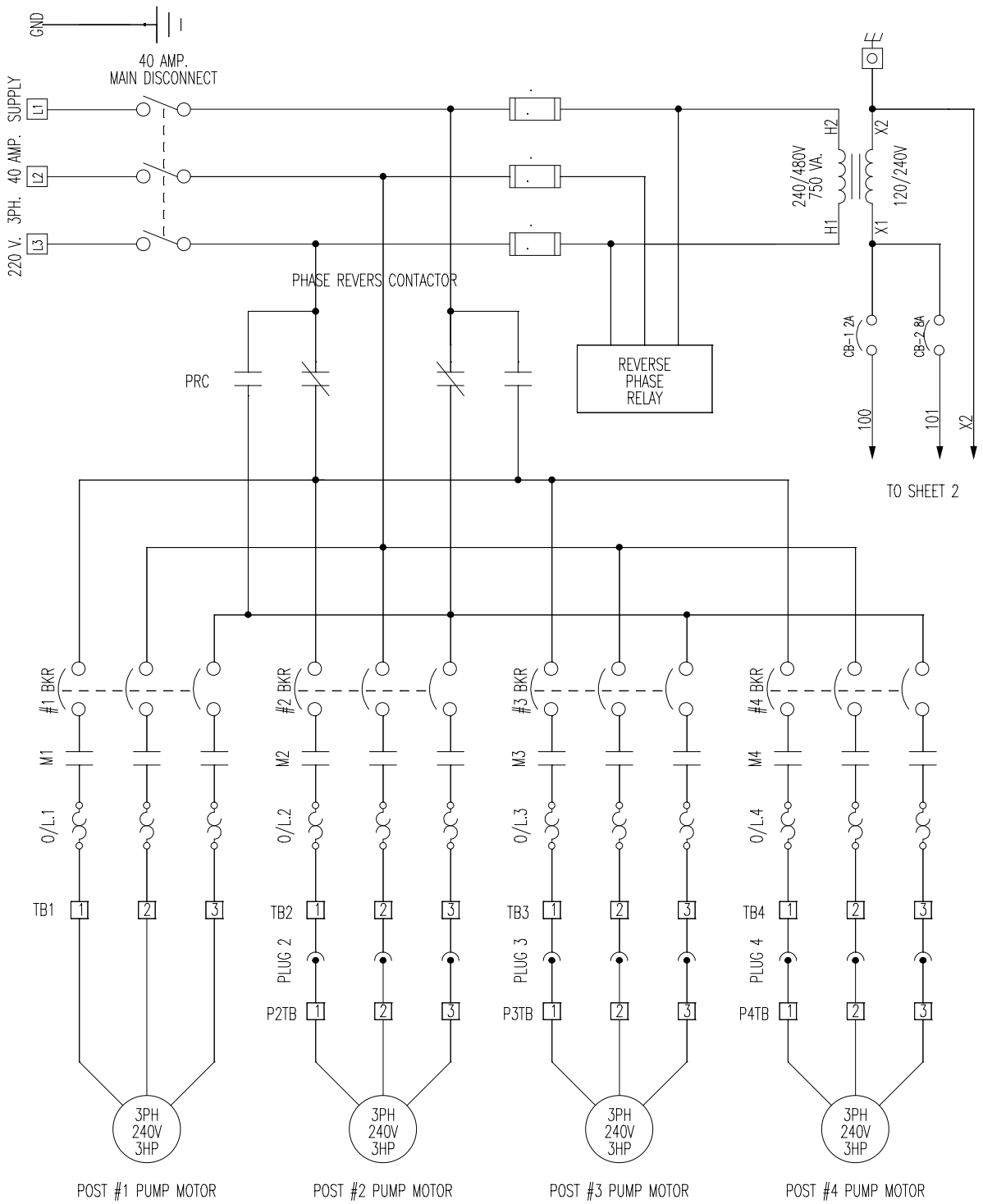

REV. #1	DRAWN BY M.VIG	CHECKED	MOHAWK RESOURCES LTD.	TITLE FOUR POST MOBILE LIFT	
TYPE 240/40/4P	DATE 06/16/00		65 VROOMAN AVE	DWG.NO. E – 1208	SHT.NO. 1
PHONE (800) 833-2006			AMSTERDAM, NY 12010		

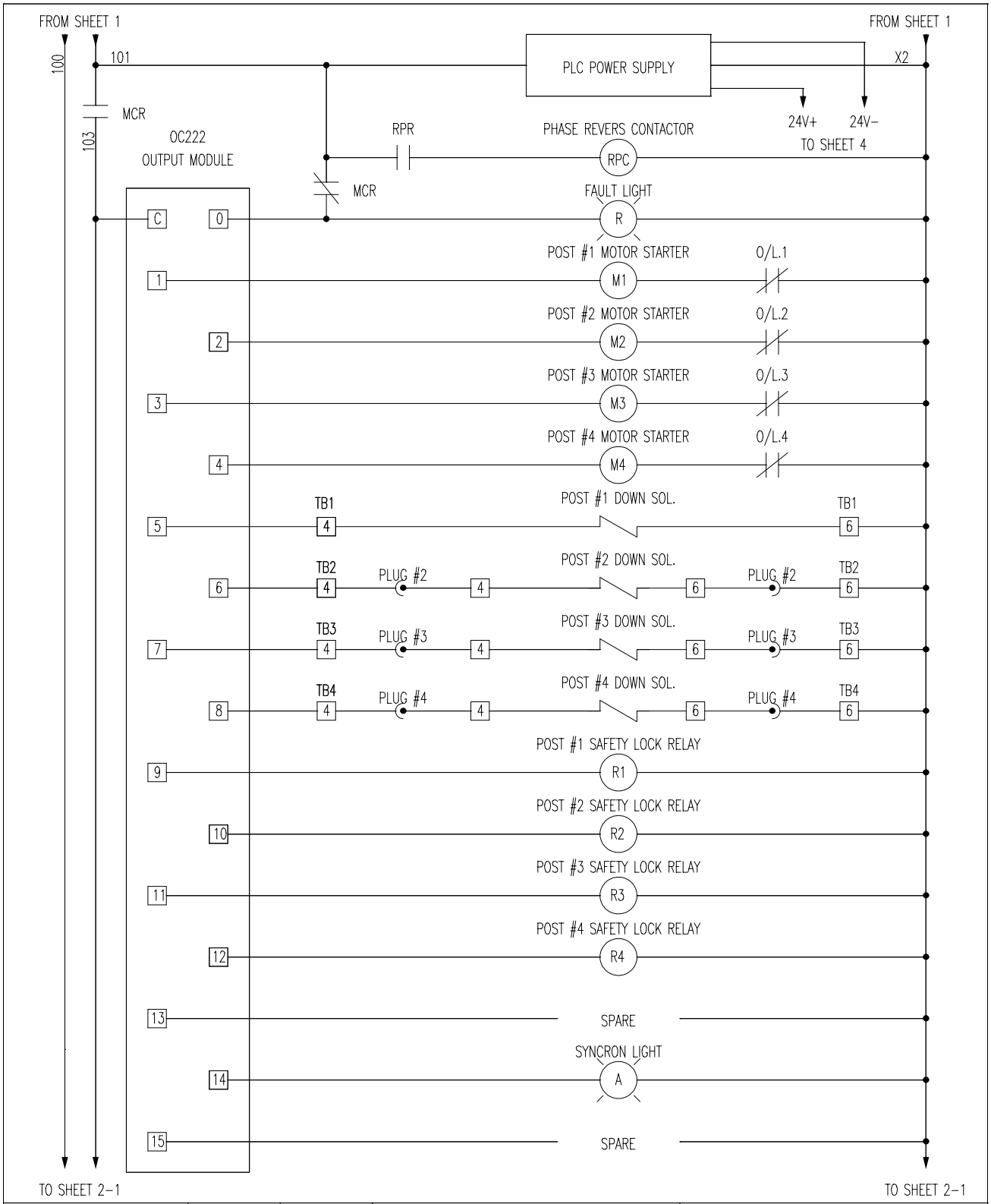

REV.	DRAWN BY	CHECKED	MOHAWK RESOURCES LTD.	TITLE
TYPE 230/60/6P	S.COLLIN			FOUR POST MOBILE LIFT
PHONE (800) 833-2006	DATE 03/26/01	PART #	65 VROOMAN AVE AMSTERDAM, NY 12010	DWG.NO. E - 1208 / SHT.NO. 2

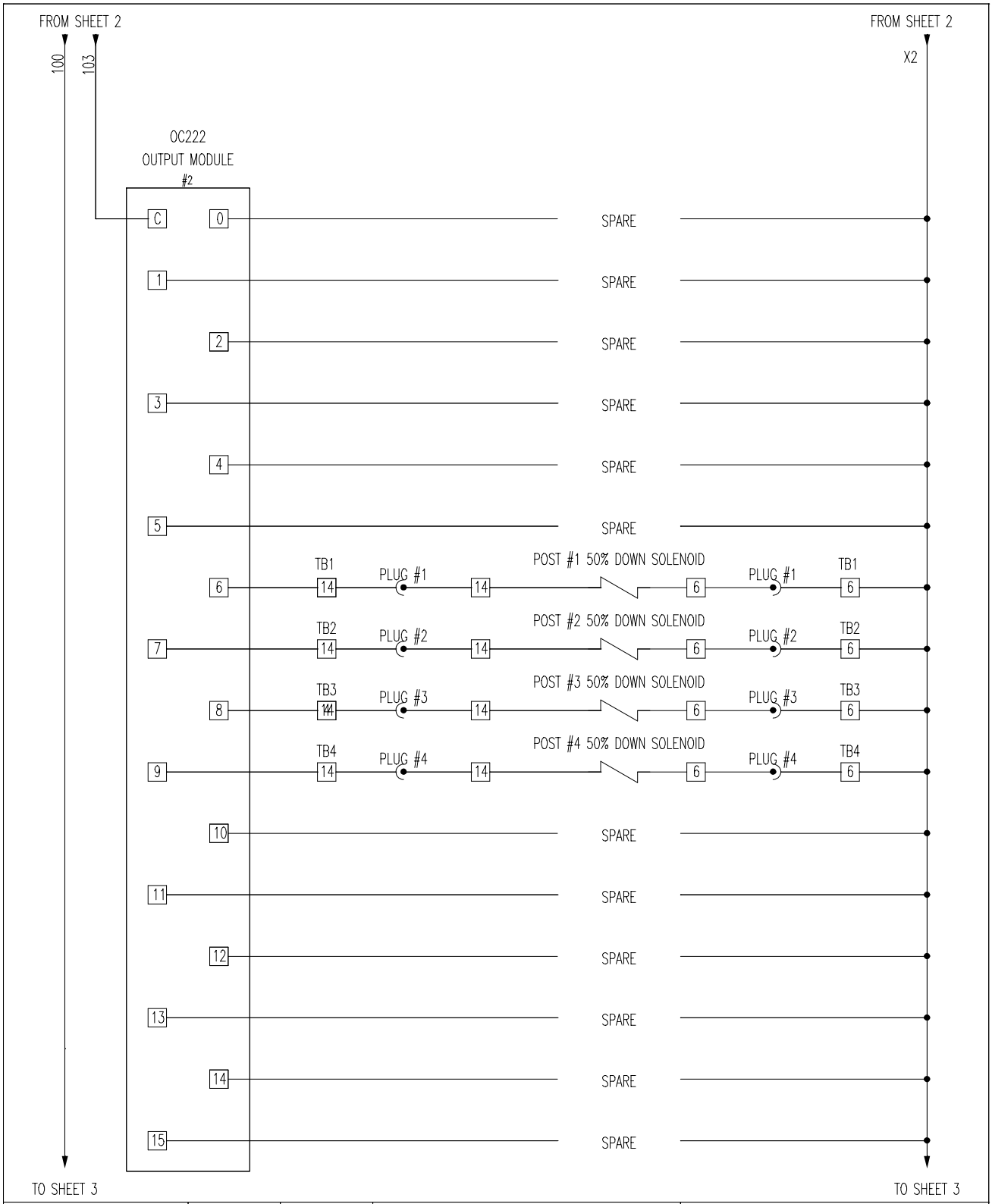

REV.	DRAWN BY	CHECKED	MOHAWK RESOURCES LTD.	TITLE
TYPE 230/60/6P	S.COLLIN			SIX POST MOBILE LIFT
PHONE (800) 833-2006	DATE 03/26/01	PART #	65 VROOMAN AVE AMSTERDAM, NY 12010	DWG.NO. E - 1208 / SHT.NO. 2-1

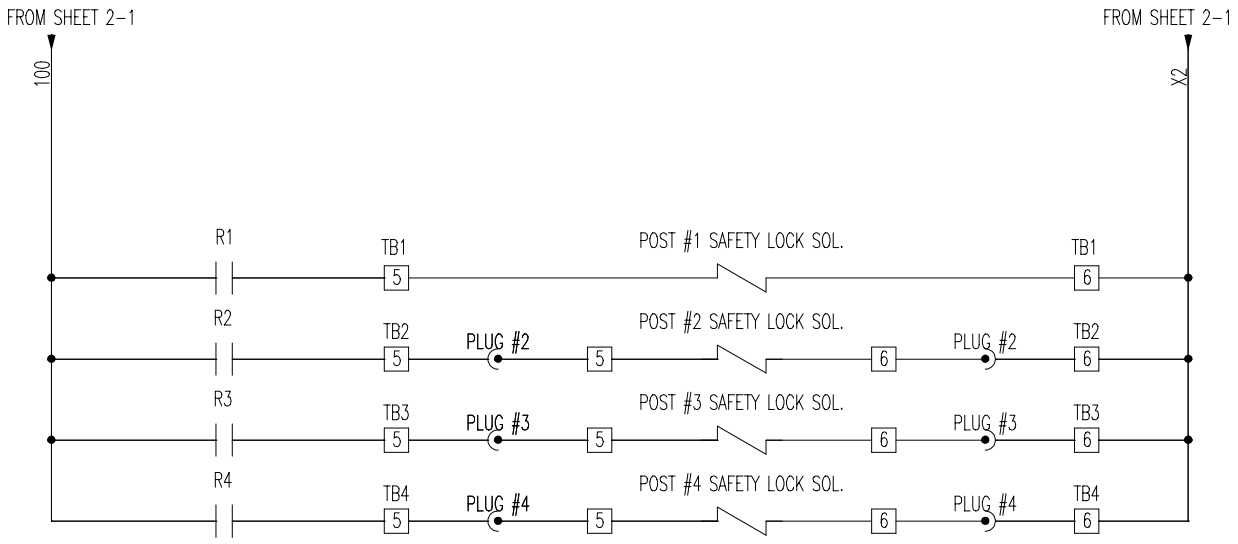

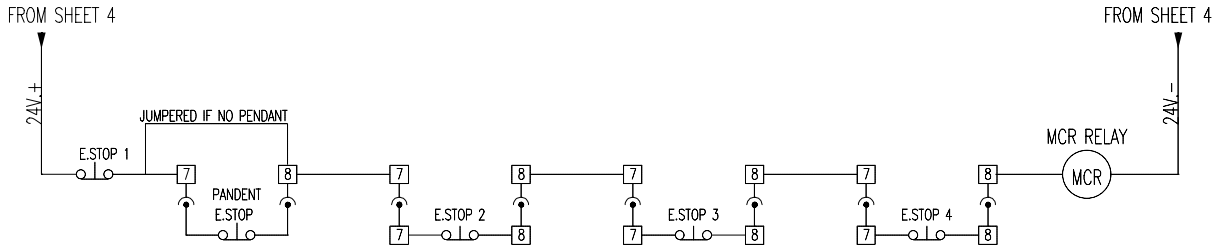

CONSULTANTS:

M.V.A. ELECTRIC LTD.
1110 HERITAGE RD.
BURLINGTON, ONTARIO

REV.		DRAWN BY S.COLLIN	CHECKED	**MOHAWK RESOURCES LTD.**	TITLE FOUR POST MOBILE LIFT
TYPE	230/60/6P	DATE 03/26/01	PART #	65 VROOMAN AVE AMSTERDAM, NY 12010	DWG.NO. E - 1208 / SHT.NO. 3
PHONE	(800) 833-2006				

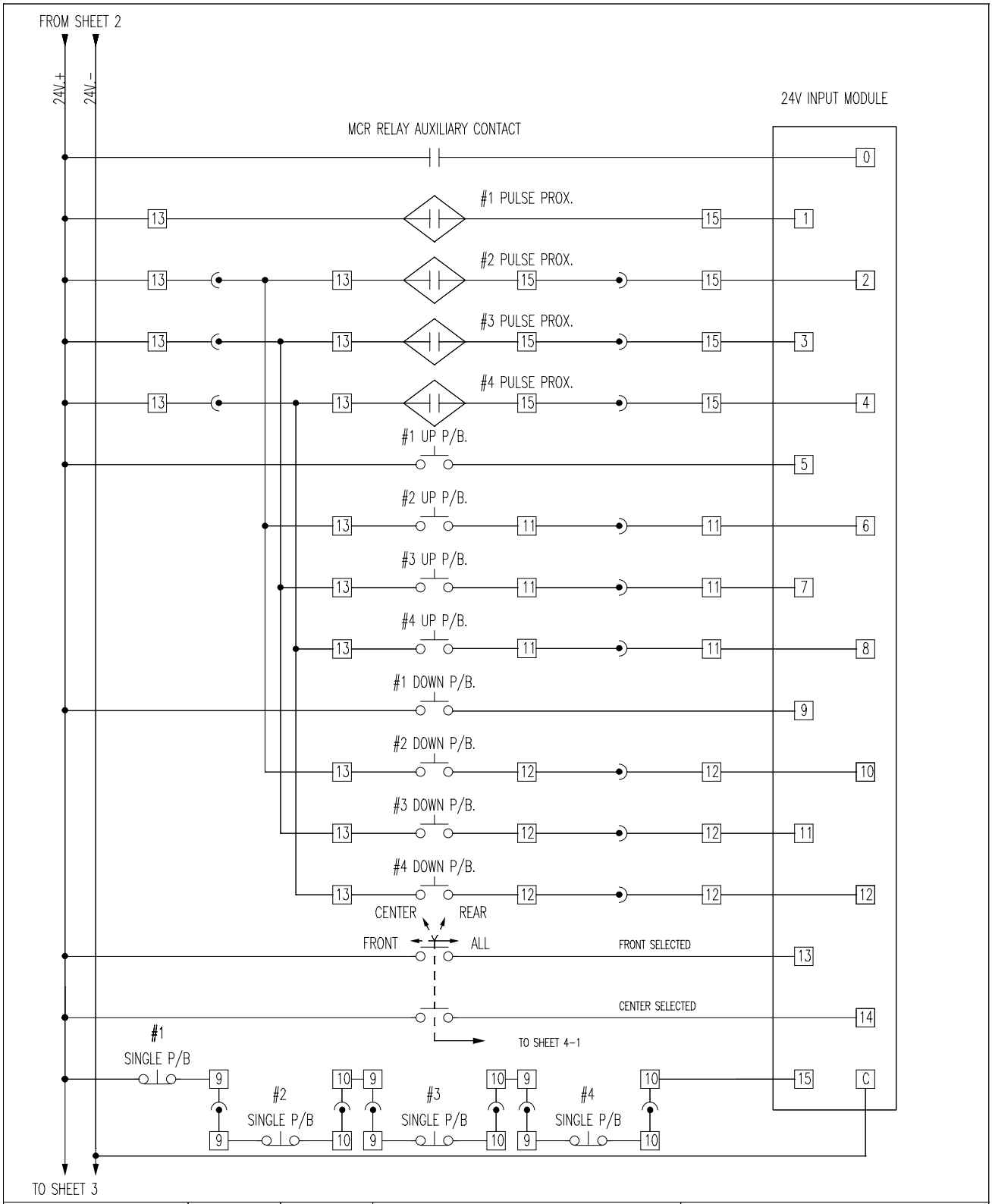

REV.	DRAWN BY	CHECKED	MOHAWK RESOURCES LTD.	TITLE	
TYPE 230/60/6P	S.COLLIN			FOUR POST MOBILE LIFT	
PHONE (800) 833-2006	DATE 03/26/01	PART #	65 VROOMAN AVE AMSTERDAM, NY 12010	DWG.NO. E - 1208	SHT.NO. 4

TERMINALS, PLUGS, CABLE COLOR CONFIGURATION

NOTE: MAIN PANEL TERMINAL GRUB 2-3-4 WIRED TO FEMALE PLUG 2-3-4, TERMINAL NUMBERS CORRESPOND PLUG PIN NUMBERS.

NOTE: POST 2-3-4 WIRED IDENTICAL. POSTS ARE INTERCHANGEABLE.

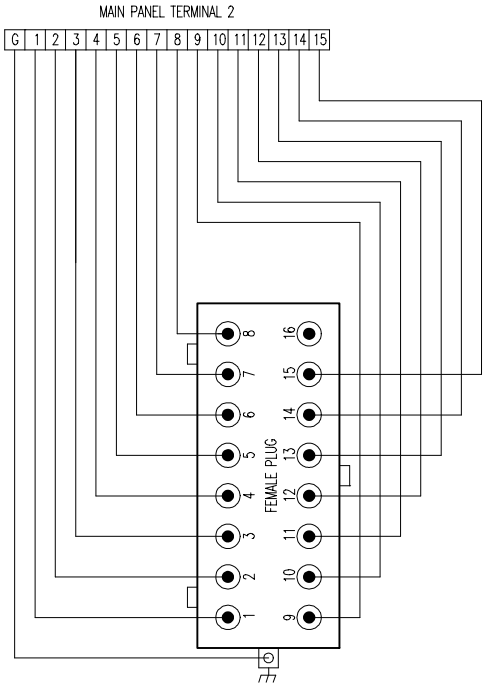

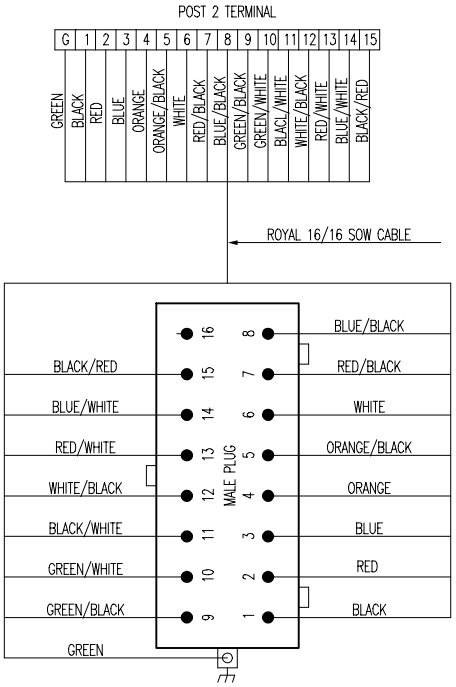

DUMMY PLUG JUMPER CONFIGURATION

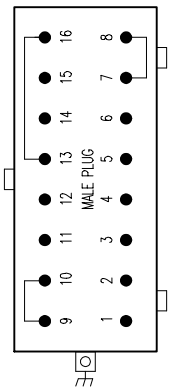

REV.	#1	DRAWN BY	CHECKED	MOHAWK RESOURCES LTD.	TITLE	
TYPE	240/40/4P	M.VIG			FOUR POST MOBILE LIFT	
PHONE	(800) 833-2006	DATE 06/16/00		65 VROOMAN AVE AMSTERDAM, NY 12010	DWG.NO. E - 1208	SHT.NO. 5

MOBILE HOIST 2 BUTTON PANDENT CONNECTION LAYOUT

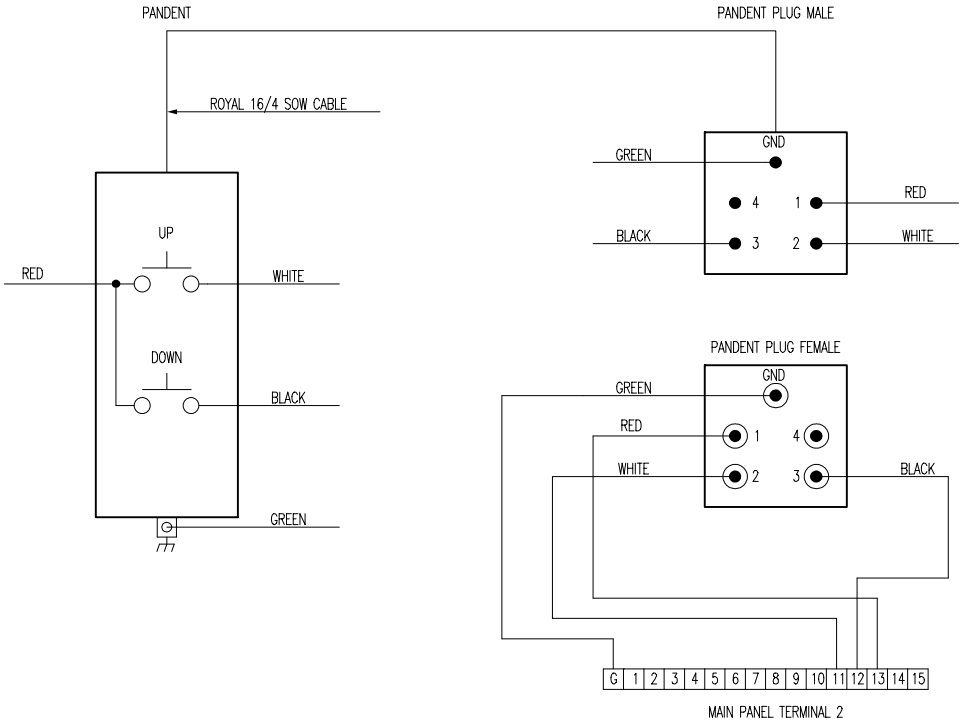

QTY	DESCRIPTION	CATALOG NUMBER	
1	PANDENT	TELEMECANIQUE	XAC-A201
1	PLUG MALE	WEIDMULLER	41100400
1	PLUG FEMALE	WEIDMULLER	41200400
1	HOOD	WEIDMULLER	41300301
1	S.MOUNT	WEIDMULLER	41500300
30'	CABLE	ROYAL	16/4 SOW

REV.	DRAWN BY M.VIG	CHECKED	MOHAWK RESOURCES LTD.	TITLE 2 BUTTON PENDANT	
TYPE	DATE 08/31/00	DATE	65 VROOMAN AVE	DWG.NO. E - 214	SHT.NO. 1
PHONE (800) 833-2006			AMSTERDAM, NY 12010		

MOBILE HOIST 3 BUTTON PANDENT CONNECTION LAYOUT

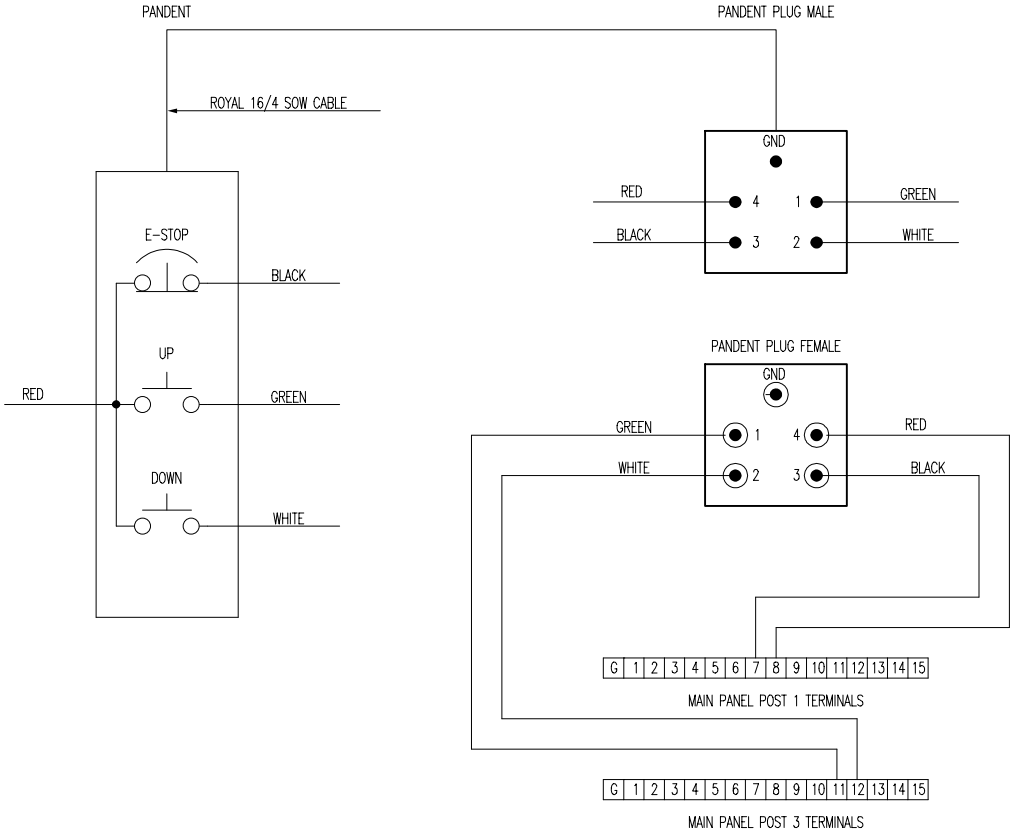

QTY	DESCRIPTION	CATALOG NUMBER	
1	PANDENT	EE CONTROLS	P03RM01
2	PLUG MALE	HTS	41100400
1	PLUG FEMALE	HTS	41200400
2	HOOD	HTS	413300301
1	S. MOUNT	HTS	41500300
20	CABLE	ROYAL	16/4 SOW

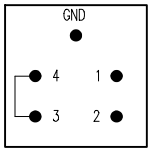

PENDANT DUMMY PLUG

REV.	DRAWN BY	CHECKED	MOHAWK RESOURCES LTD.	TITLE	
TYPE	M.VIG			3 BUTTON PENDANT	
PHONE (800) 833-2006	DATE 06/16/00	DATE	65 VROOMAN AVE AMSTERDAM, NY 12010	DWG.NO. E - 215	SHT.NO. 1