#	DESCRIPTION	DATE	APPROVED
A	ADDITION OF ALCTV CERTIFICATION	06/01/2014	ergo
B	ALI VERIFICATION LOGO	12/12/2013	CHS

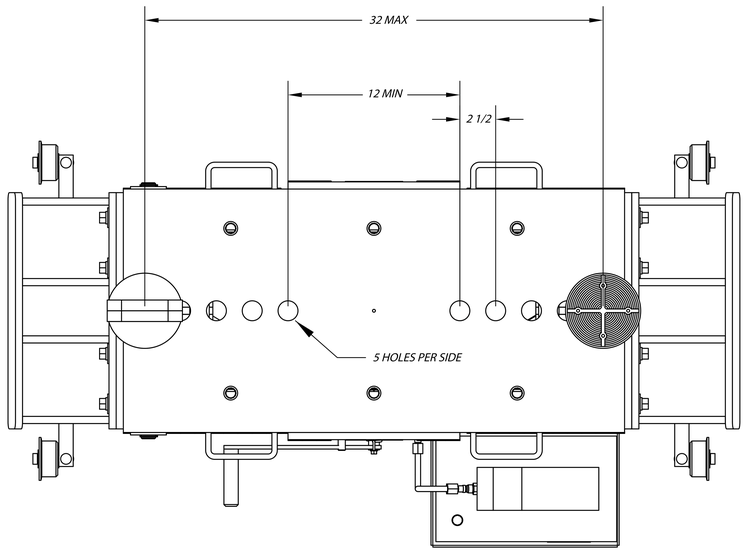

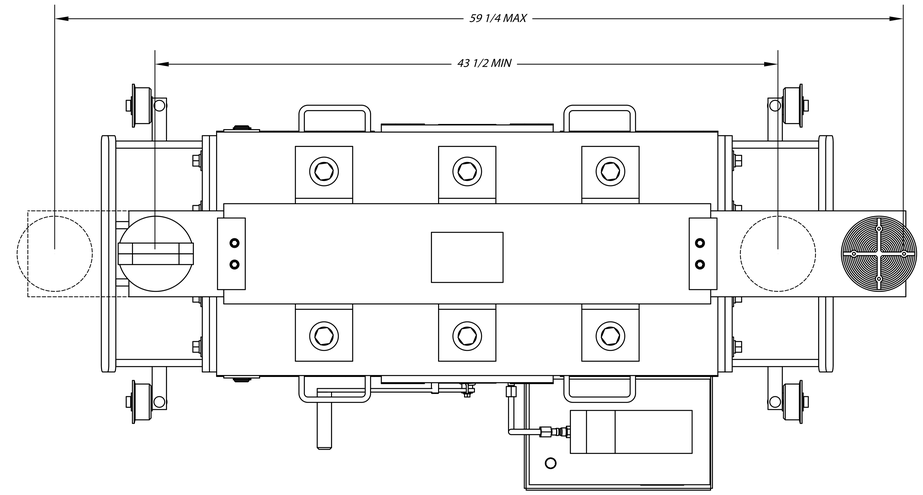

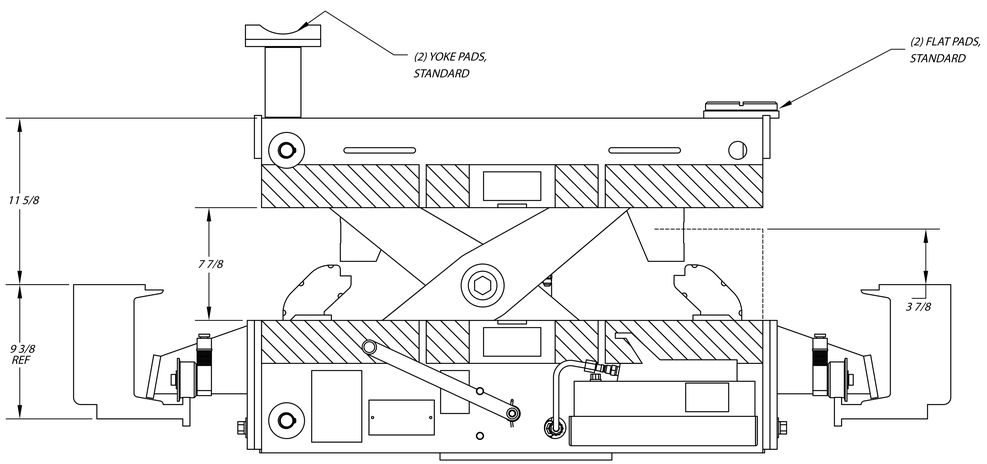

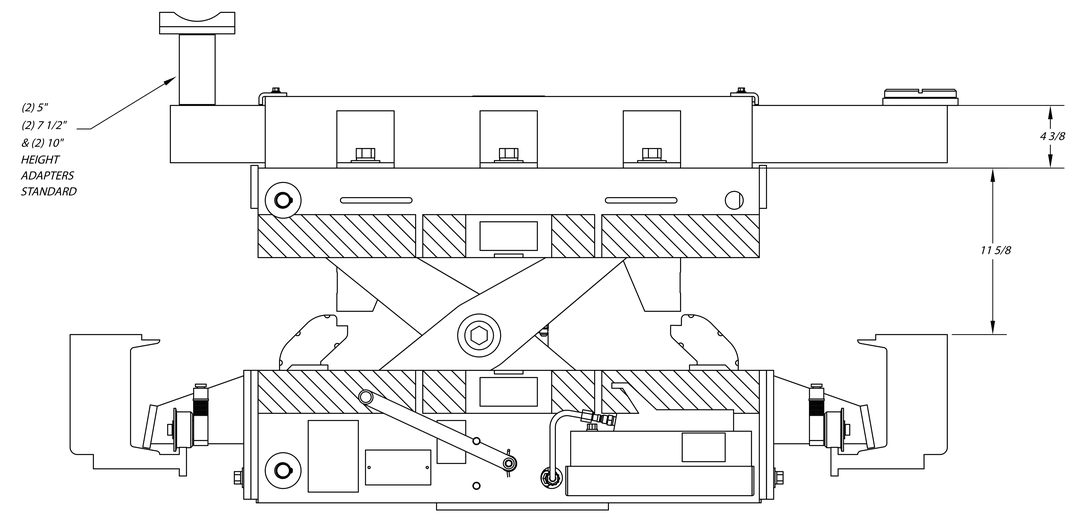

RJ-50-AH-37500-P SERIES AIR/HYD JACKING BEAM:

(PARALLELOGRAM VERSION, RATED 37,500 LBS MAX)

CAPACITY DEPENDENT ON LIFT CAPACITY

RJ-50-AH-37500-P SERIES JACKING BEAM SHOWN ABOVE

WITH OPTIONAL SLIDER ARM ATTACHMENT:

RE-RATED TO 15,000 LB CAPACITY

MODEL RJ-50-AH-37500-P
TRACK ASSISTED JACKING BEAM
CAPACITY: 50,000 LBS

AUTOMOTIVE LIFT INSTITUTE MEMBER

ALI CERTIFIED ALCTV-2011

B

THIS LIFT HAS BEEN TESTED AND CERTIFIED BY A NATIONALLY RECOGNIZED TESTING LABORATORY (NRTL) TO MEET THE REQUIREMENTS OF U.L. STANDARD 201 FOR GARAGE EQUIPMENT AND ANSI/ALI ALCTV-2011 FOR AUTOMOTIVE LIFT CONSTRUCTION.

A

D -SIZE

NOTICE OF CONFIDENTIAL INFORMATION

INFORMATION CONTAINED HEREIN IS CONFIDENTIAL AND PROPERTY OF MOHAWK RESOURCES LTD.. WHERE DRAWING IS FURNISHED TO OTHERS IT SHALL BE USED SOLELY FOR PURPOSES OF INSPECTION, INSTALLATION, OR MAINTENANCE. THE INFORMATION SHALL NOT BE USED OR DISCLOSED BY THE RECIPIENT FOR ANY OTHER PURPOSES WHATSOEVER.

NOTES:
1. REMOVE ALL SHARP CORNERS & EDGES.
2. UNLESS OTHERWISE SPECIFIED, SURFACE FINISH TO BE 125 RMS.
3. WELDING MEDIUM SHALL CONFORM TO AWS SPECIFICATIONS TO E-70XX ELECTRODES OR E-70TI CODE 5.3 FLUX CORE WIRE ONLY.

TOLERANCES:
ANGULAR ± 1 °
FRACTIONAL ± .030
DECIMAL:
0.XX ± .030
0.XXX ± .005

FILE NAME

NEXT ASSEMBLY

SCALE	DRAWN	MOHAWK RESOURCES LTD.	
1/4	rv		
CHECKED	APPROVED	TITLE RJ-50-AH-37500-P SPEC RJ Assy for Parallelogram	
DATE 07/12	WEIGHT 854 LB.	FROM	DRAWING NUMBER B